TEREX®

CC 9800

1600t capacity
Crawler Crane
Datasheet
metric

CC 9800

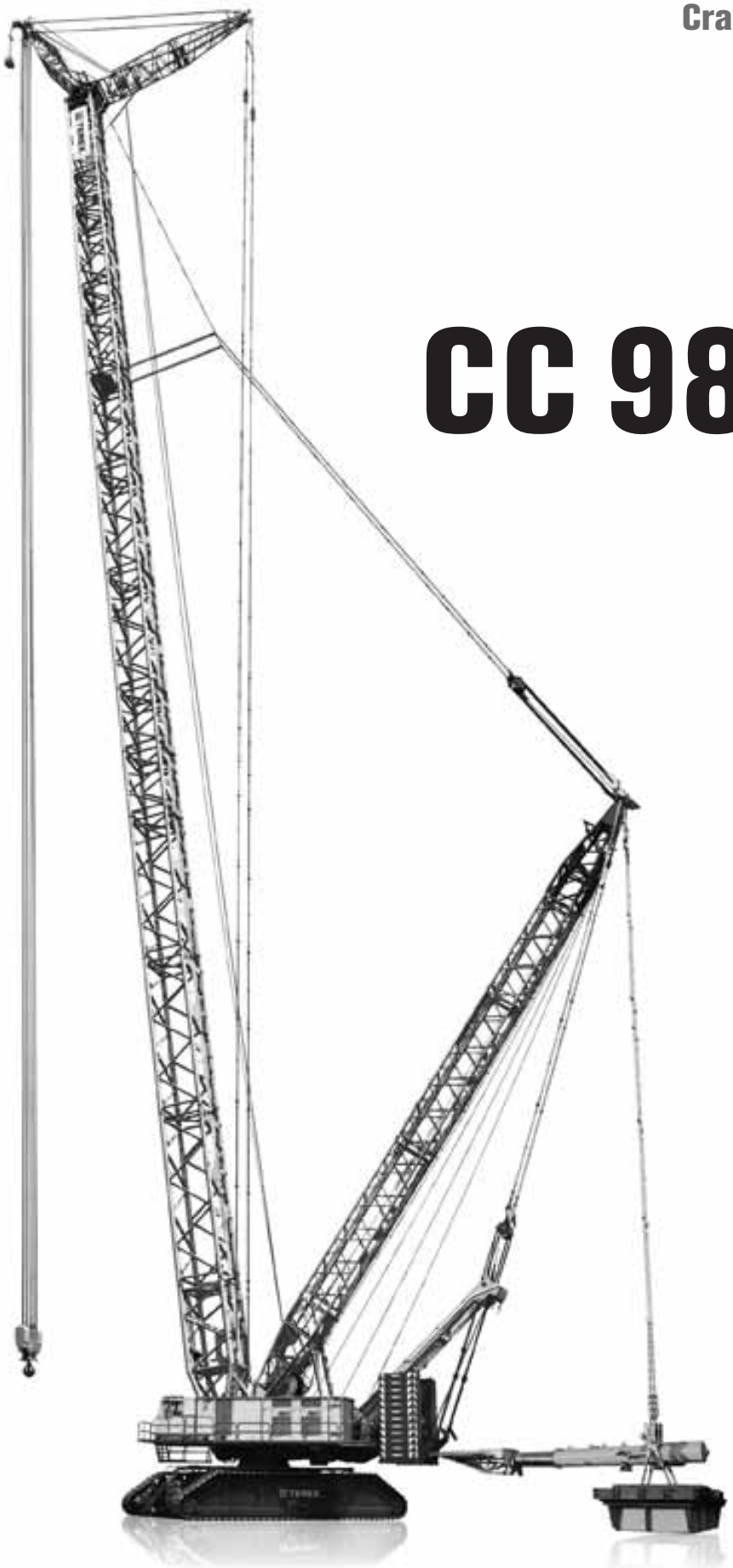

WORKS FOR YOU.™

CONTENTS

Inhalt · Contenu · Indice · Contenido · Indice · СОДЕРЖАНИЕ

Page · Seite · Page · Pagina · Página · Página · Страница:

KEY

Zeichenerklärung · Légende · Leggenda · Leyenda · Legenda · Условные Обозначения

Track · Spur · Voie · Cingolo · Orugas · Esteira · Колея

Counterweight + central ballast (ZB) · Gegengewicht + Zentralballast (ZB) · Contrepoids + lest central (ZB) · Contrappeso + zavorra centrale (ZB) · Contrapeso + lastre central (ZB) · Contrapeso + lastro central (ZB) · Противовес + центральный балласт (ZB)

Superlift counterweight · Superlift-Gegengewicht · Contrepoids Superlift · Contrappeso Superlift · Contrapeso Superlift · Contrapeso do Superlift · Противовес суперлифт

Superlift radius · Superlift-Radius · Rayon Superlift · Sbraccio Superlift · Radio de Superlift · Raio do Superlift · Радиус для оборудования суперлифт

Possible load of hook block · Mögliche Traglast Unterflasche · Charge possible de crochet-moufle · Portata possibile di bozzello · Carga permitida de gancho · Carga possível do moitão · Допустимая нагрузка на крюкоблок

Weight of hook block · Gewicht Unterflasche · Poids de crochet-moufle · Peso di bozello · Peso de gancho · Peso do moitão · Вес крюкоблока

Load radius · Lastradius · Portée · Raggio di lavoro · Radio de trabajo · Raio de operação · Рабочий радиус

Main boom · Hauptausleger · Flèche principale · Braccio principale · Pluma principal · Lança principal · Главная стрела

Fly jib · Hilfsausleger · Fléchette · Falcone · Plumín · Lança auxiliar · Стрела с изменяемым вылетом

Main boom angle · Hauptauslegerwinkel · Jarret de flèche principale · Inclinazione braccio base · Ángulo de pluma principal · Ângulo da lança principal · Угол наклона главной стрелы

Fly jib angle · Hilfsauslegerwinkel · Jarret de fléchette · Inclinazione falcone · Ángulo de plumín · Ângulo da lança auxiliar · Угол наклона стрелы с изменяемым вылетом

Wind speed in m/s (meter per second) · Windgeschwindigkeit in m/s · Vitesse du vent en m/s · Velocità del vento in m/s (metri al secondo) · Velocidad del viento en m/s · Velocidade do vento em m/s (metros por segundo) · Скорость ветра в м/сек

„D“

S: heavy · schwer · lourd · pesante · pesado · pesada · сильный

L: light · leicht · léger · leggera · ligero · leve · слабый

H: Main boom · Hauptausleger · Flèche principale · Braccio principale · Pluma principal · Lança principal · Главная стрела

W: Luffing fly jib · Wippbarer Hilfsausleger · Fléchette à volée variable · Falcone a volata variabile · Plumín abatible · Jib de lance variável · Стрела с изменяемым углом вылета и гуськом

F: Fixed fly jib · Starrer Hilfsausleger · Fléchette fixe · Falcone fisso · Plumín fijo · Lança auxiliar fixa · Неподвижная стрела с изменяемым вылетом

SL: Superlift · Superlift · Levage supplémentaire · Superlift · Superlift · Kit Superlift · Суперлифт (система для увеличения грузоподъемности)

V: Vessellift · Vessellift · Vessellift · Vessellift · Vessellift · Içamento de embarcação · Подъем судов

SGL: Heavy base length · Schwere Grundlänge · Longueur de base lourde · Lunghezza carro in versione pesante · Longitud de base pesada · Comprimento da base pesada · Длина тяжелой базы

HIGHLIGHTS

- Max. capacity 1600 t
- Max. load moment 26928 mt
- Superlift radii 19-30 m
- Excellent capacities at the luffing fly jib
- Redundant drivelines
- 400 V power supply

- Max. Tragfähigkeit 1600 t
- Max. Lastmoment 26928 mt
- Superliftradien 19-30 m
- Ausgezeichnete Tragfähigkeiten am wippbaren Hilfsausleger
- Redundante Antriebseinheiten
- 400 V Stromaggregat

- Capacité maximale de 1600 t
- Moment de charge maximum 26928 mt
- Radius superlift 19-30 m
- Excellentes capacités avec la volée variable
- Double unité d'entraînement
- Groupe électrogène de 400 V

- Capacità max 1600 t
- Max. momento di carico 26.928 t.-metro
- Portata Superlift 19-30 m
- Eccellente capacità del falcone a volata variabile
- Trasmissione ridondante
- Alimentazione 400 V

- Máx. capacidad 1600 t
- Momento de carga máx. 26928 t·m
- Radios Superlift 19-30 m
- Excelentes capacidades en el plumín abatible
- Transmisiones redundantes
- Suministro de energía de 400 V

- Capacidade máx. de 1600 t
- Momento de carga máx. 26928 toneladas
- Raios da Superlift 19 o 30 m
- Excelentes capacidades na lança auxiliar articulada
- Sistemas de tração redundantes
- Fonte de alimentação de 400 V

- Макс. грузоподъемностью 1600 т
- Макс. момент нагрузки 26928 метрических тонн
- Радиус системы суперлифт 19-30 м
- Отличная грузоподъемность гуська с механизмом подъема
- Резервные лини привода
- Питание 400 В

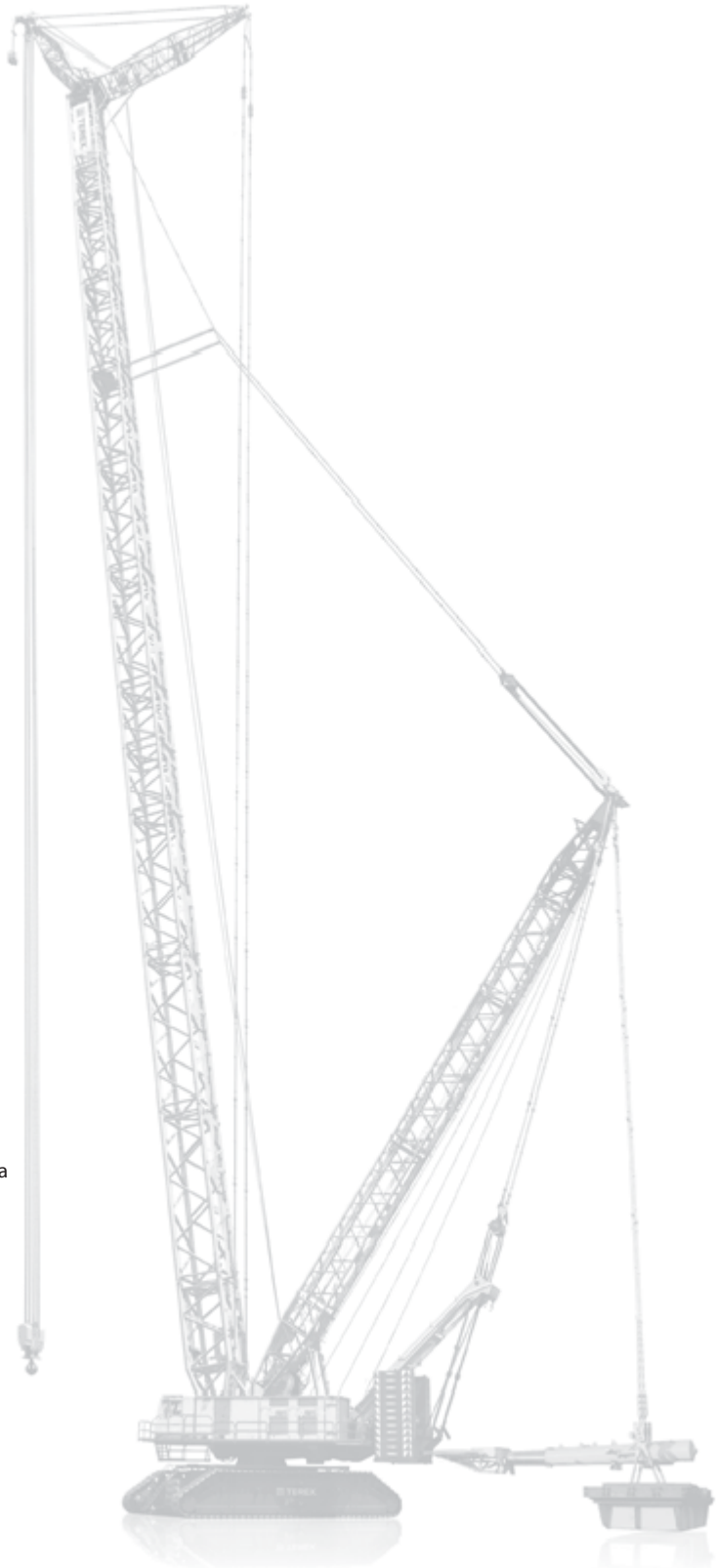

TEREX®

SPECIFICATIONS

Technische Daten · Caractéristiques · Dati tecnici · Datos técnicos · Especificações · Технические характеристики

Working speeds (infinitely variable) · Arbeitsgeschwindigkeiten (stufenlos regelbar) · Vitesses de travail (réglables sans paliers) · Rapporti di lavoro (a regolazione continua) · Velocidades de trabajo (progresión continua) · Velocidades de trabalho (infinitamente variáveis) · Рабочие скорости (с бесступенчатой регулировкой)

Mechanism Antrieb Mécanisme Funzioni Mecanismos Mecanismo Механизм		Rope ø Seil-ø ø du câble ø fune ø cable Diâm. cabo Диаметр троса	Speeds[1)] Geschwindigkeiten[1)] Vitesses[1)] Rapporti[1)] Velocidades[1)] Velocidades[1)] Скорости[1)]	Single line pull Seilzug je Strang Effort sur brin simple Tiro fune singolo Tracción de cable simple Tração de linha simples Тяговое усилие на одиночном тросе	Length of hoist rope Länge des Hubseils Longueur du câble de levage Lunghezza della fune dell'argano Long. de cable de cabrestante Compr. do cabo do guincho Длина троса
Hoist I+II · Hubwerk I+II · Treuil de levage I+II · Agano I+II · Cabrestante I+II · Guincho I+II · подъем I+II	(H1+H2)	40 mm	max. 120 m / min	352 kN / 316 kN[2)]	1540 m
Runner winch R – option · Runnerwinde R – Option · Tambour potence R – option · Verricello runner R – opzione · Cabrastente de runner R – opción · Guincho do runner R – opcional · лебедка подвижного блока R	(H3)	40 mm	max. 90 m / min	352 kN	700 m
Boom derricking · Wippwerk Hauptausleger · Variation de flèche · Inclinazione del braccio · Descenso de pluma · Inclinação da lança · Подъем стрелы деррик-краном	(W2)	40 mm	max. 120 m / min		
Boom hoist · Einziehwerk · Relevage de flèche · Argano del braccio · Cabrestante de pluma Guincho da lança · Подъем стрелы	(E)	40 mm	max. 40 m / min		
Jib luffing · Wippwerk Hilfs-ausleger · Variation de volée · Sollevamento del braccio · Abatimiento de plumín · Inclinação da lança auxiliar · Изменение вылета стрелы	(W1)	40 mm	max. 105 m / min		
Slewing (rpm) · Drehwerk (U / min) Orientation (tr / mn) · Rotazione (rpm) · Unidad de giro (rpm) · Giro (rpm) · Поворот (rpm)			0-0,6 1/min		

1) top layer · oberste Lage · couches supérieure · avvolgimento superiore · capa superior · camada superior · верхний слой

2) without / with reeving effect considered · Angabe ohne / mit Wirkungsgrad der Einscherung · sans / avec effort de mouflage · senza / con effetto avvolgimento · considerado sin / con efecto de enhebrado · com / sem considerar o efeito da passagem dos cabos · без учета/с учетом запасовки

Carrier performance · Fahrleistungen · Performances du porteur · Prestazioni del carro · Rendimiento del vehículo · Desempenho do veículo · Общие характеристики шасси

1st gear · 1. Gang · 1ère vitesse · 1a marcia · 1a marcha · 1a. marcha · 1я передача	max. 0,4 km/h
2nd gear · 2. Gang · 2ème vitesse · 2a marcia · 2a marcha · 2a. marcha · 2я передача	max. 0,8 km/h

SPECIFICATIONS

Technische Daten · Caractéristiques · Dati tecnici · Datos técnicos · Especificações · Технические характеристики

Basic crane dimensions · Hauptabmessungen · Dimensions de la grue de base · Dimensioni di base della gru · Dimensiones básicas de la grúa · Dimensões do guindaste básico · Базовые габариты крана

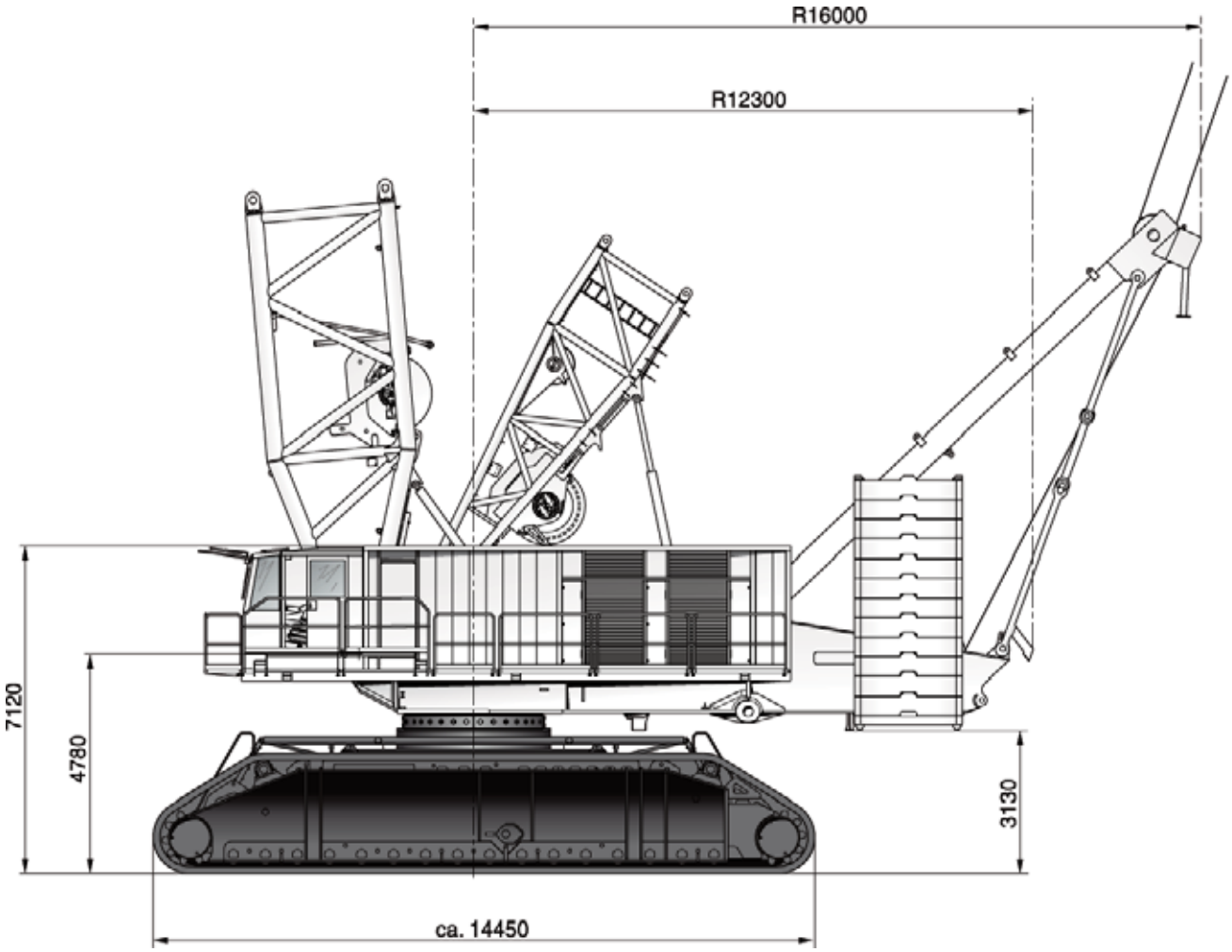

SPECIFICATIONS

CC 9800

Technische Daten · Caractéristiques · Dati tecnici · Datos técnicos · Especificações · Технические характеристики

Basic crane dimensions · Hauptabmessungen · Dimensions de la grue de base · Dimensioni di base della gru · Dimensiones básicas de la grúa · Dimensões do guindaste básico · Базовые габариты крана

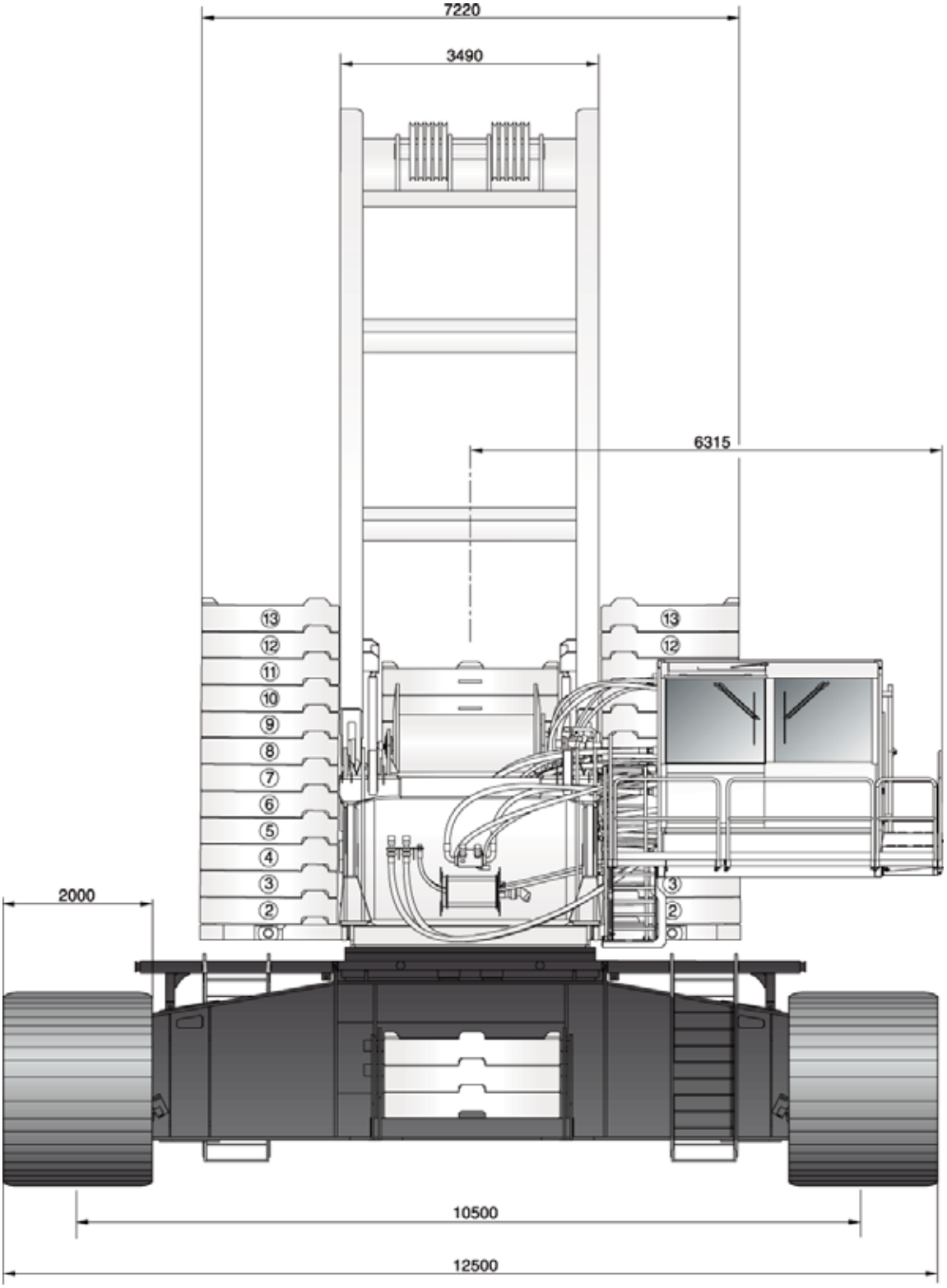

SPECIFICATIONS

CC 9800

Technische Daten · Caractéristiques · Dati tecnici · Datos técnicos · Especificações · Технические характеристики

Hook block system · Unterflaschensystem · Système de crochet-moufle · Sistema per bozzello · Sistema de bloque de gancho · Sistema de moitão · Система крюкоблока

Type Typ Type Tipo Tipo Tipo Тип	Possible load Mögliche Traglast Charge possible Portata possibile Carga permitida Carga possível Допустимая нагрузка	Number of sheaves Anzahl der Rollen Nombre de poulies Numero di pulegge Total de poleas Número de polias Количество шкивов	Number of lines Strangzahl Nombre de brins No max avvolgim. Reenvíos máx. Número de cabos Кратность троса	Weight Gewicht Poids Peso Peso Peso Вес	„D“
2 x 800	1600 t 800 t 800 t 495 t	2 x 13 2 x 7 1 x 13 1 x 7	2 x 26 2 x 12 2 x 12 1 x 14	44 000 kg 28 000 kg / 18 000 kg 28 000 kg / 18 000 kg 22 000 kg / 8 500 kg	8,70 m 6,50 m 6,20 m 6,50 m
100	100 t	1 x 1	1 x 3	7 700 kg / 3 700 kg	4,50 m

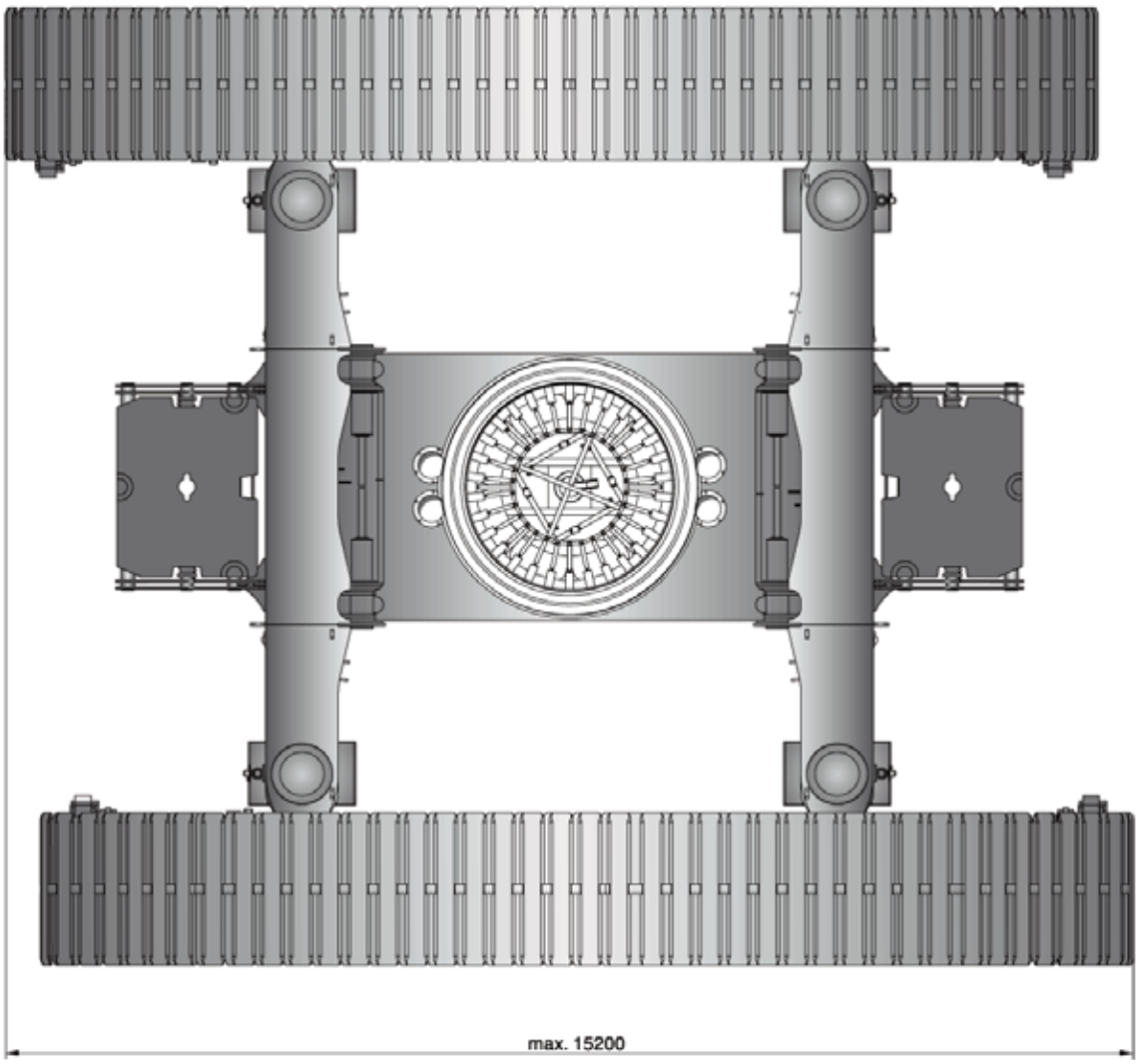

SUPERLIFT CONFIGURATIONS

Superlift-Konfigurationen · Combinaisons Superlift · Configurazioni Superlift · Configuraciones Superlift · Configurações do Superlift · Варианты конфигурации суперлифт

Standard Superlift attachment · Serienmäßige Superlifteinrichtung · Superlift de série · Sistema Superlift di serie · Accesorio Superlift estándar · Acessório Superlift padrão · Стандартный комплект оборудования суперлифт

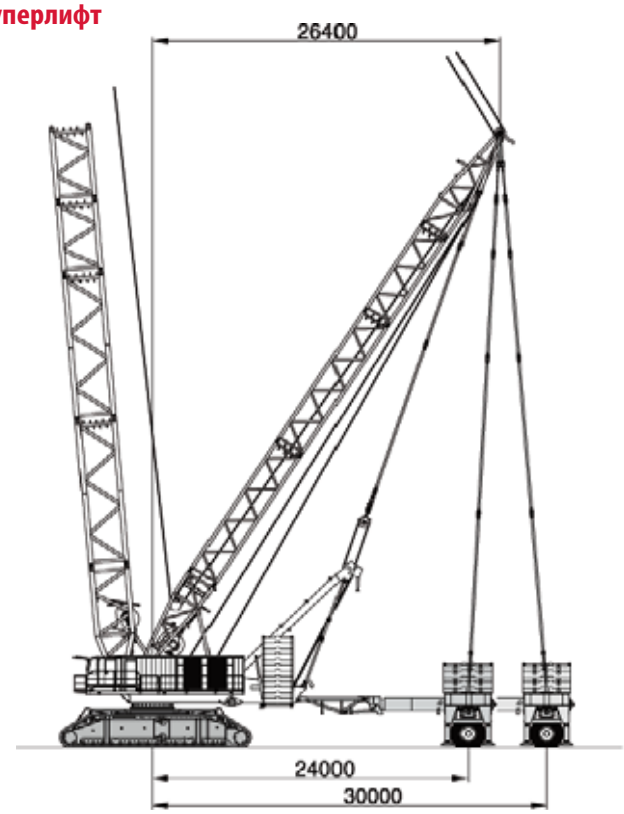

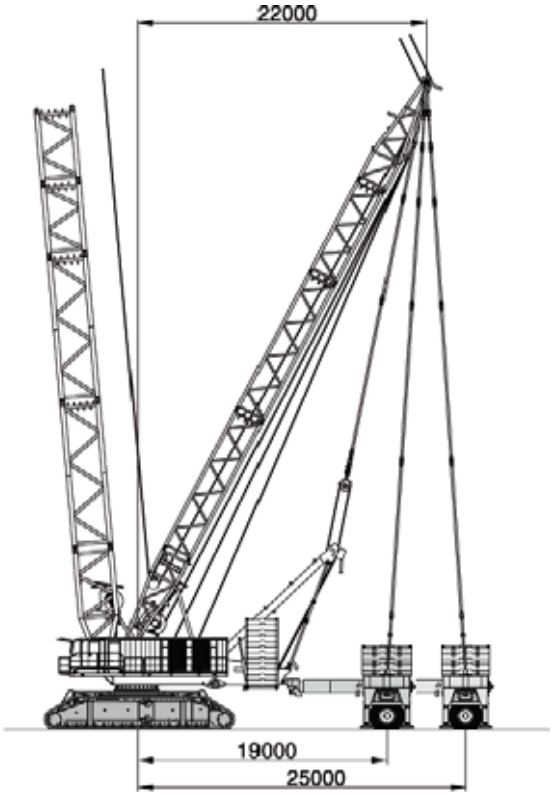

Variable Superlift attachment · Variable Superlifteinrichtung · Superlift variable · Configurazione Superlift variabile · Accesorio Superlift variable · Acessório Superlift variável · Оборудование суперлифт с регулировкой по весу подъема

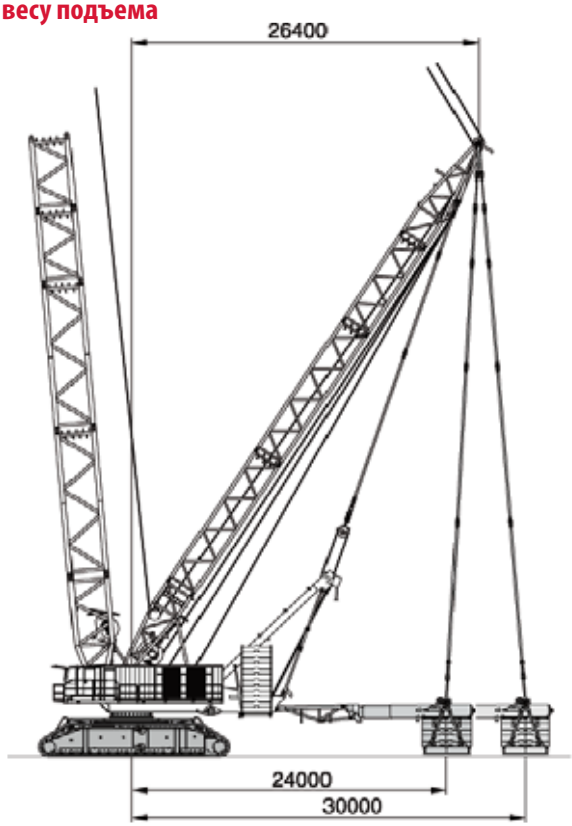

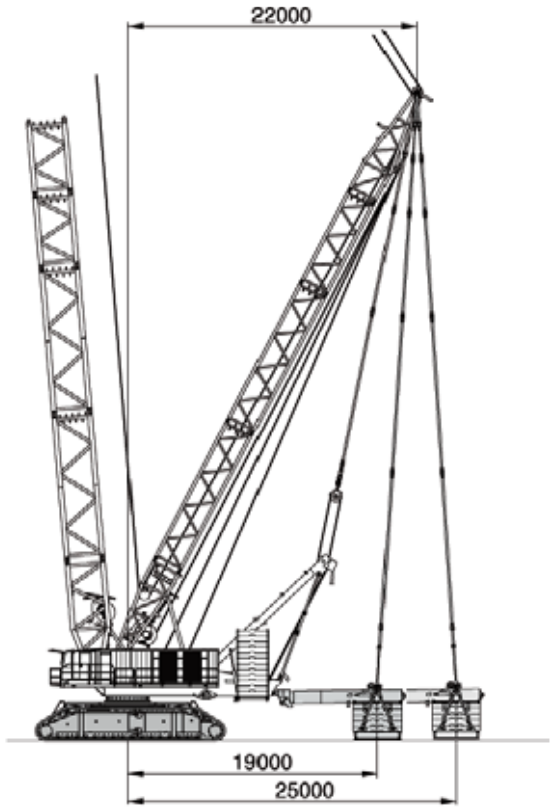

SPECIFICATIONS

CC 9800

Technische Daten · Caractéristiques · Dati tecnici · Datos técnicos · Especificações · Технические характеристики

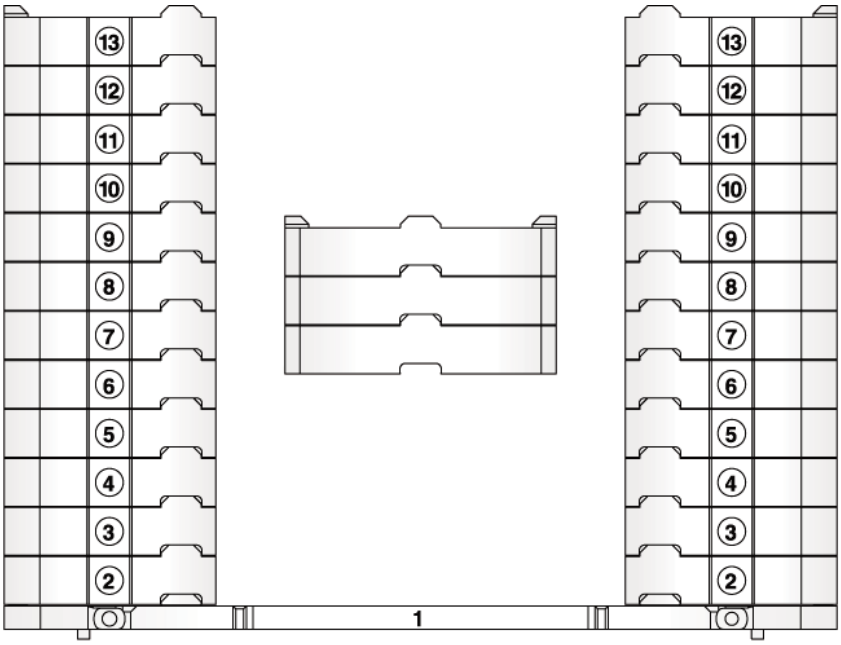

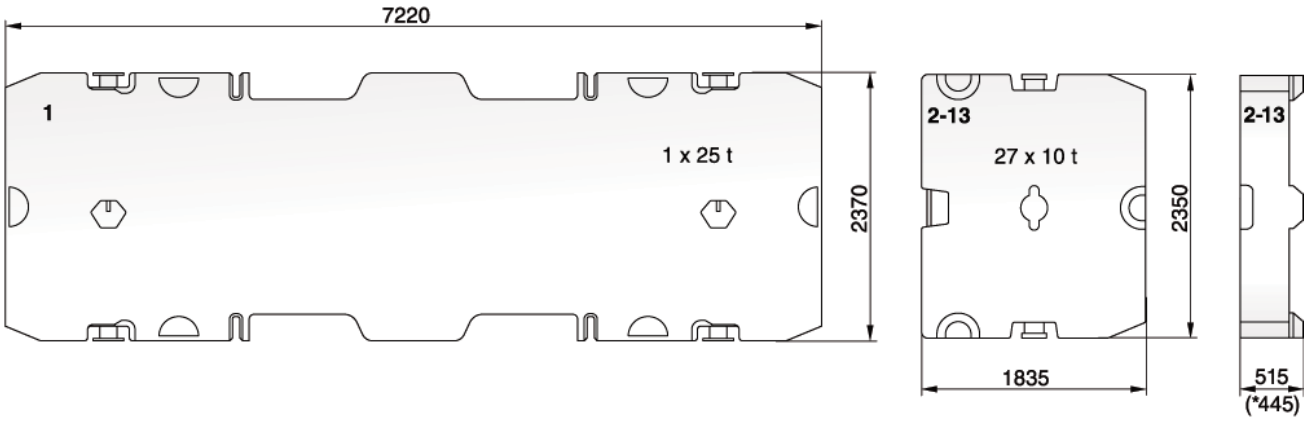

* Option · Option · En option · Opzione · Opcion · Opcional · Опция

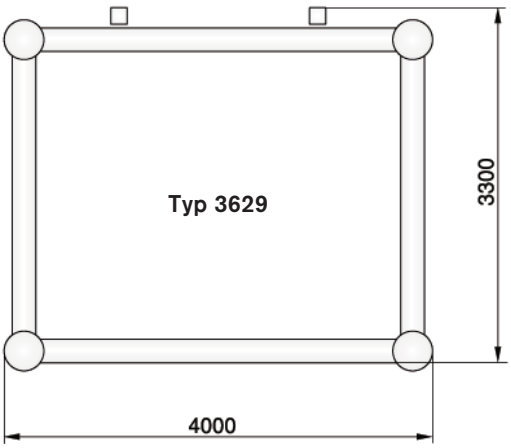

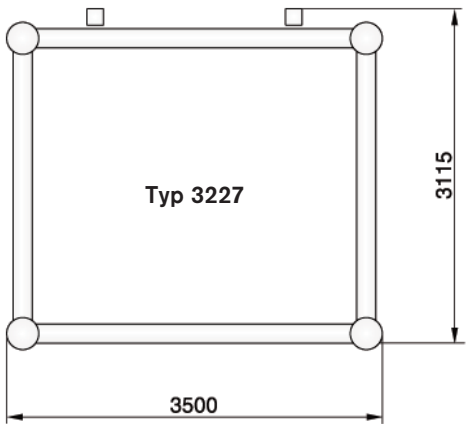

SPECIFICATIONS

CC 9800

Technische Daten · Caractéristiques · Dati tecnici · Datos técnicos · Especificações · Технические характеристики

30,5 t

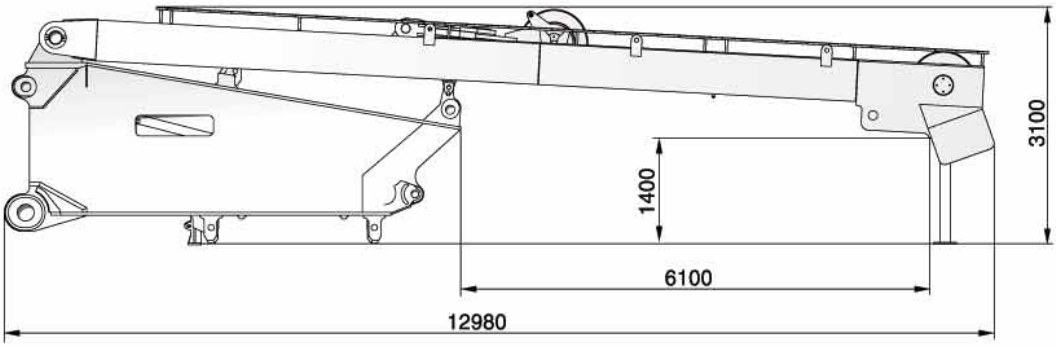

41,0 t

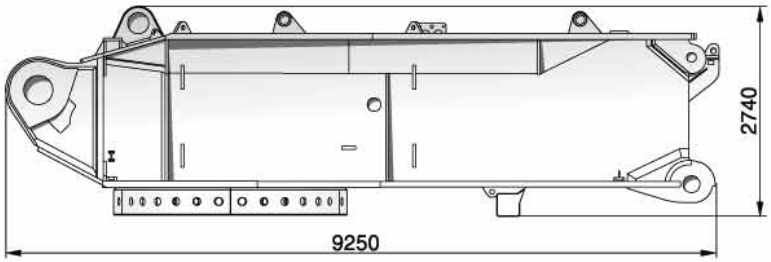

44,3 t

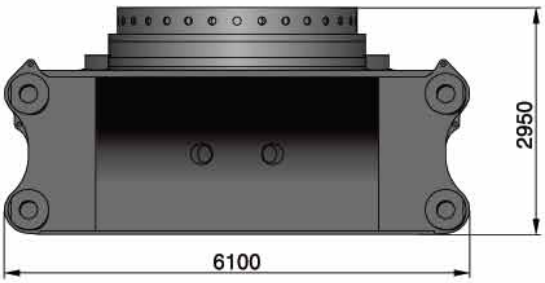

59,3 t
(42,4 t without slew ring · ohne Rollendreh-verbindung · sans couronne d'orientation · senza ralla · sin anillo de giro · sem anel de giro · без опорно-поворотного круга)

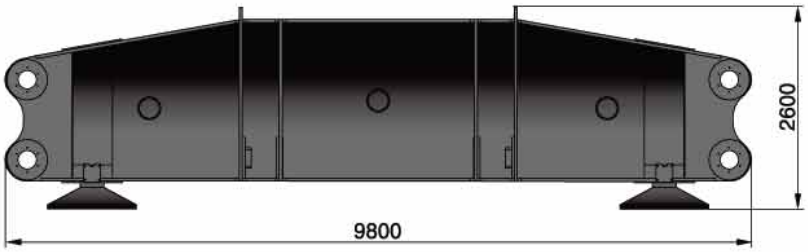

28,3 t

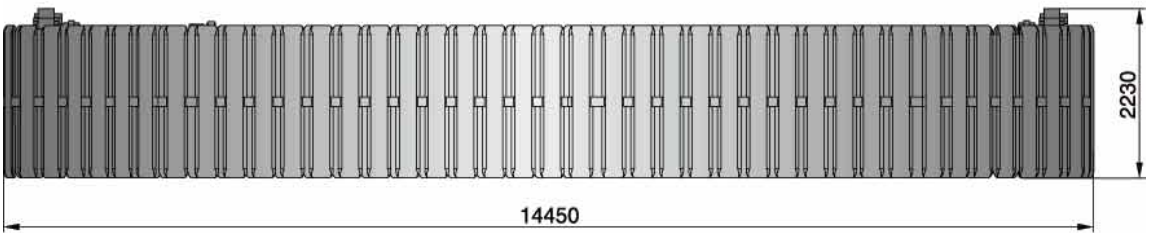

90,0 t
(44,0 t + 46,0 t)

BOOM COMBINATIONS

CC 9800

Ausleger-Kombinationen · Combinaisons de flèche · Combinazioni braccio · Combinaciones de pluma · Combinações de lanças · Комбинации стрелы

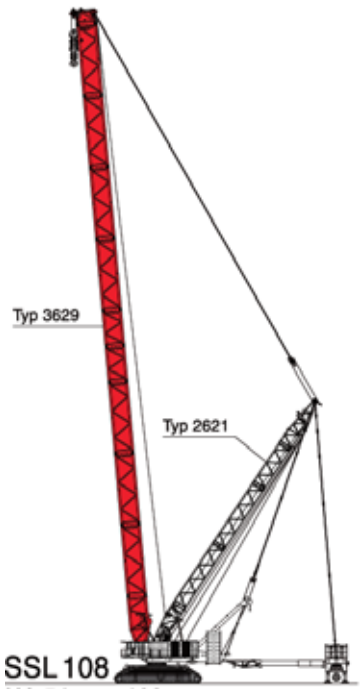

SSL 108
HA 54 m ... 108 m

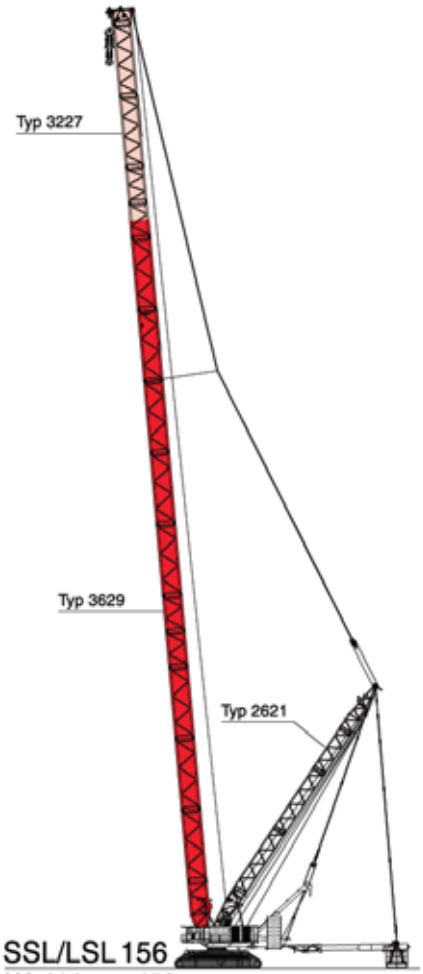

SSL/LSL 156
HA 114 m ... 156 m

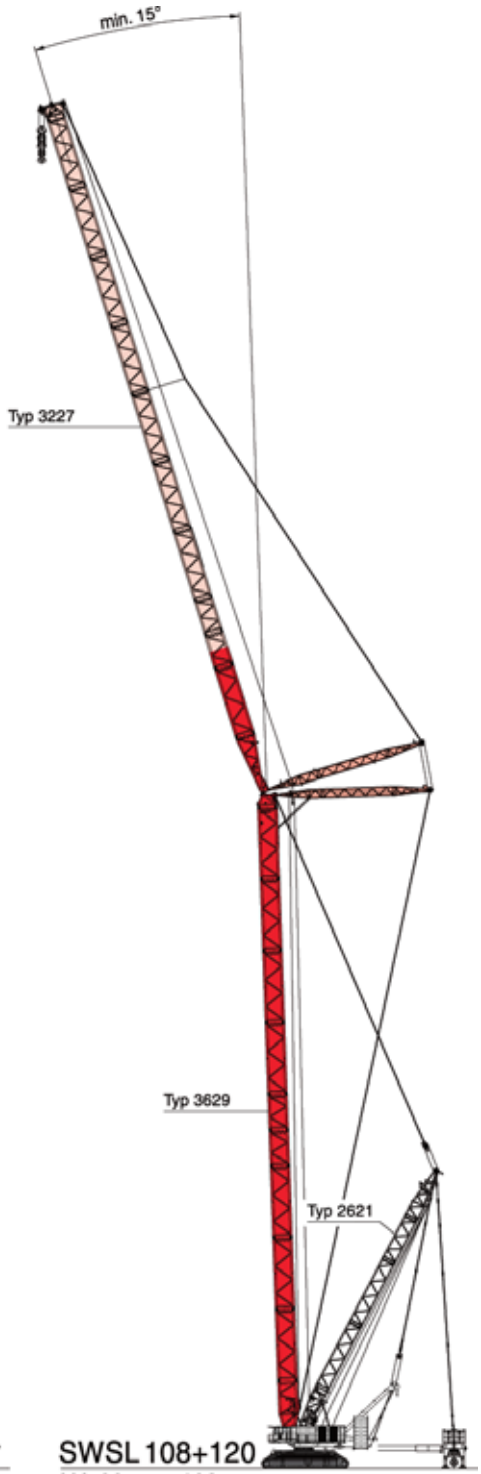

SWSL 108+120
HA 60 m ... 108 m
HI 36 m ... 120 m

TEREX®

BOOM COMBINATIONS

CC 9800

Ausleger-Kombinationen · Combinaisons de flèche · Combinazioni braccio · Combinaciones de pluma · Combinações de lanças · Комбинации стрелы

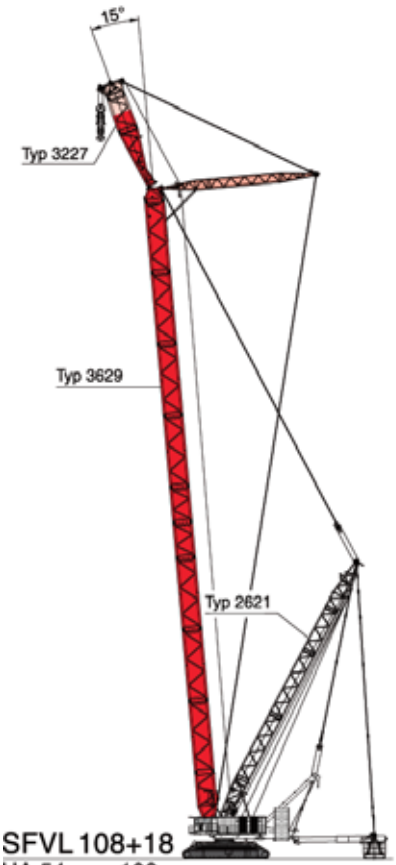

SFVL 108+18
HA 54 m ... 108 m

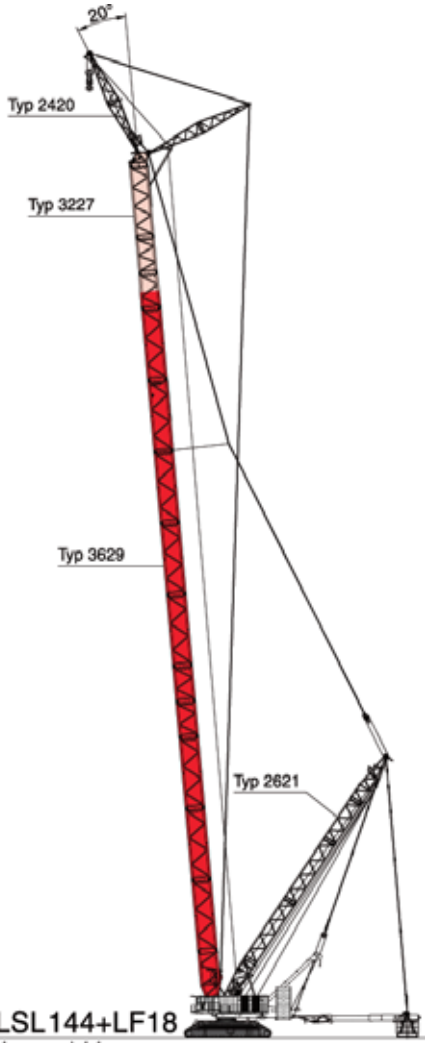

SSL/LSL 144+LF18
HA 114 m ... 144 m

BOOM COMBINATIONS

CC 9800

Ausleger-Kombinationen · Combinaisons de flèche · Combinazioni braccio · Combinaciones de pluma · Combinações de lanças · Комбинации стрелы

S1 variant · S1-Variante · Combinaison S1 · Versione S1 · Variante S1 · Variante S1 · вариант S1

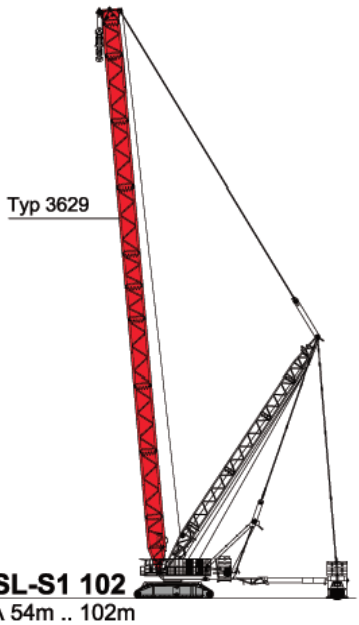

SSL-S1 102
HA 54m .. 102m

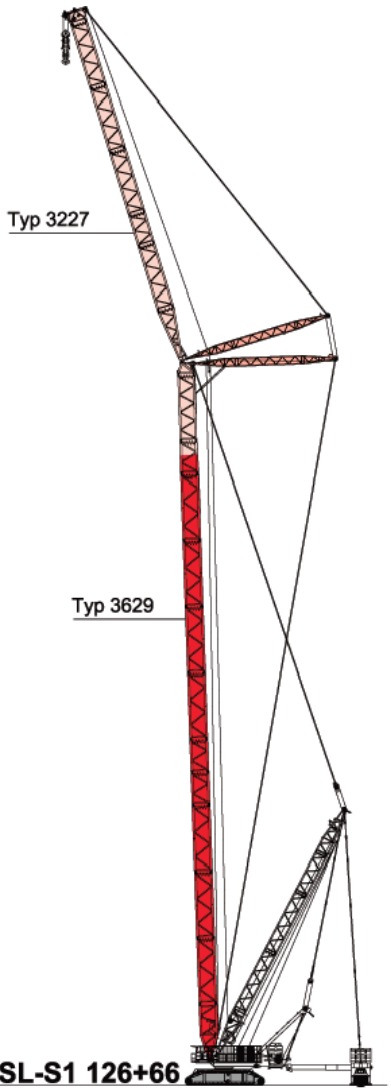

SWSL-S1 126+66
HA 60m .. 126m
HI 36m .. 108m

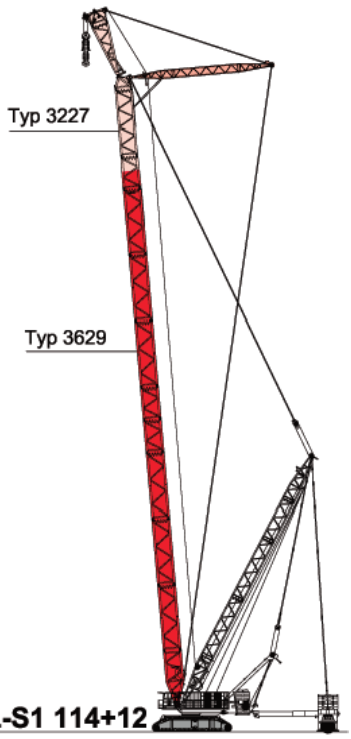

SFVL-S1 114+12
HA 60m .. 126m
HI 12m

SSL, SSL S1, SSL/LSL, SSL/LSL S1

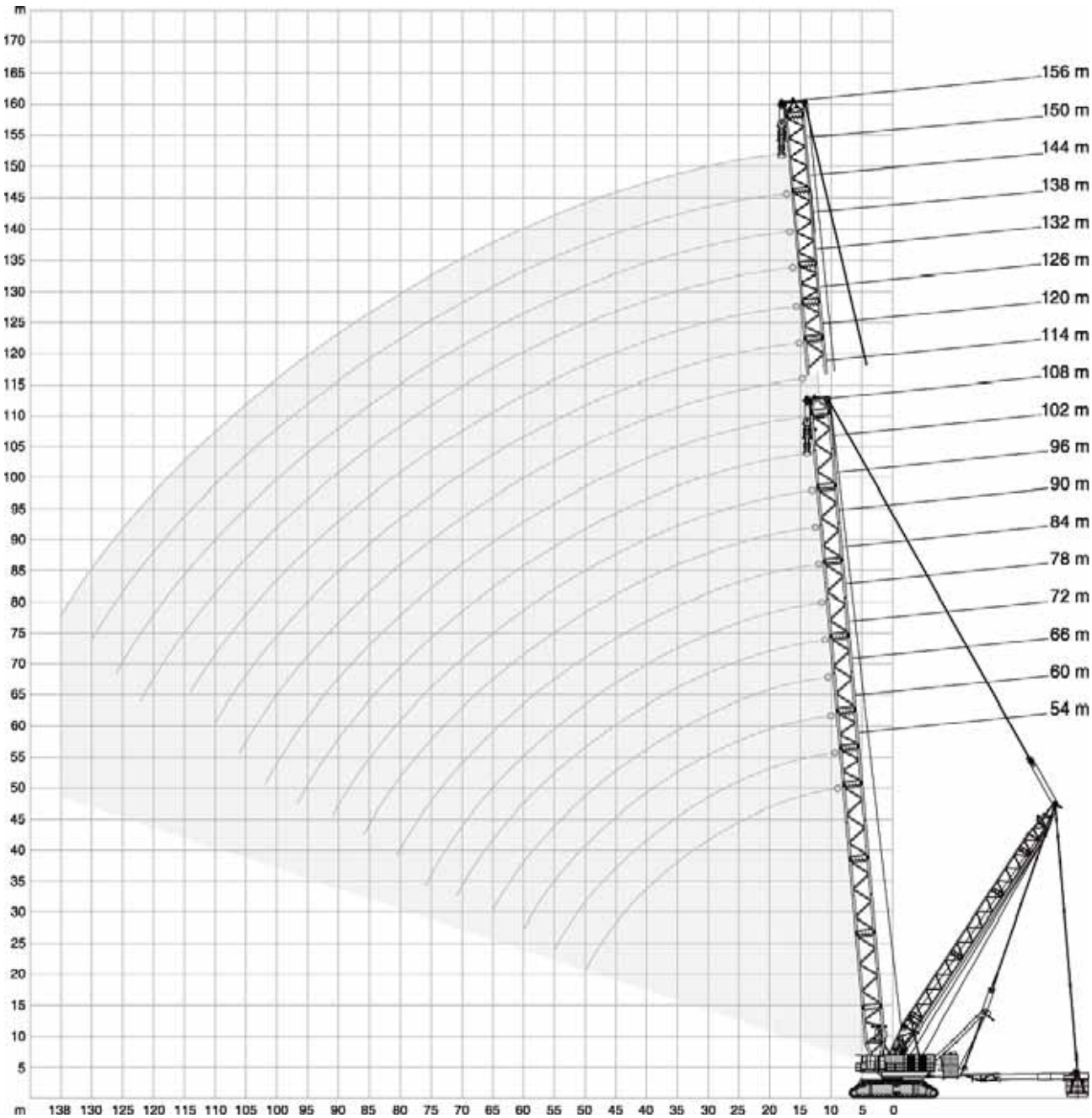

295 t + 60 t ZB | 19-30 m | 10,50 m | 9.8 m/s | 360° | ISO

	54 m		60 m		66 m		72 m		78 m		
	0 t	0-800 t	0 t	0-800 t	0 t	0-800 t	0 t	0-800 t	0 t	0-800 t	
m	t	t	t	t	t	t	t	t	t	t	m
10	842,0	1600,0	795,0	1579,0	-	-	-	-	-	-	10
11	762,0	1549,5	722,0	1543,5	679,0	1522,0	645,0	1351,0	-	-	11
12	682,0	1520,0	649,0	1508,0	617,0	1499,0	588,0	1351,0	560,0	1234,0	12
14	571,0	1447,0	545,0	1435,0	521,0	1426,0	497,0	1351,0	475,0	1234,0	14
16	488,0	1380,0	467,0	1369,0	447,0	1360,0	428,0	1351,0	410,0	1234,0	16
18	424,0	1319,0	407,0	1307,0	390,0	1299,0	374,0	1290,0	358,0	1234,0	18
20	368,0	1263,0	359,0	1251,0	344,0	1242,0	330,0	1234,0	316,0	1227,0	20
22	316,0	1211,0	311,0	1199,0	306,0	1191,0	294,0	1183,0	282,0	1175,0	22
24	275,0	1122,0	270,0	1115,0	266,0	1110,0	263,0	1105,0	252,0	1100,0	24
26	242,0	1032,0	237,0	1025,0	233,0	1019,0	230,0	1015,0	227,0	1010,0	26
28	215,0	936,0	210,0	948,0	206,0	942,0	203,0	938,0	200,0	933,0	28
30	192,0	849,0	187,0	880,0	183,0	875,0	180,0	870,0	177,0	866,0	30
34	157,0	712,0	151,0	751,0	147,0	764,0	144,0	759,0	141,0	755,0	34
38	130,0	605,0	124,0	641,0	120,0	669,0	116,0	671,0	112,0	667,0	38
42	110,0	528,0	103,0	548,0	97,5	580,0	93,5	599,0	89,5	595,0	42
46	93,5	448,0	86,0	483,0	80,5	502,0	76,0	526,0	71,5	536,0	46
50	80,5	376,0	72,5	422,0	66,5	436,0	61,5	461,0	57,0	477,0	50
54	-	-	62,0	360,0	55,5	396,0	50,0	404,0	45,4	422,0	54
55	-	-	59,5	346,0	53,2	382,7	47,6	391,2	42,9	409,7	55
58	-	-	-	-	46,6	343,0	40,7	359,0	35,6	373,0	58
60	-	-	-	-	42,9	318,0	36,8	341,5	31,5	351,0	60
62	-	-	-	-	-	-	33,0	324,0	27,5	329,0	62
65	-	-	-	-	-	-	28,3	292,0	22,4	307,0	65
66	-	-	-	-	-	-	-	-	20,8	301,0	66
70	-	-	-	-	-	-	-	-	-	267,0	70
71	-	-	-	-	-	-	-	-	-	258,0	71

295 t + 60 t ZB | 19-30 m | 10,50 m | 9.8 m/s | 360° | ISO

	84 m		90 m		96 m		102 m		108 m		
	0 t	0-800 t	0 t	0-800 t	0 t	0-800 t	0 t	0-800 t	0 t	0-800 t	
m	t	t	t	t	t	t	t	t	t	t	m
12	534,0	1115,0	-	-	-	-	-	-	-	-	12
13	494,0	1115,0	471,0	1085,0	449,0	980,0	-	-	-	-	13
14	454,0	1115,0	436,0	1085,0	416,0	980,0	399,0	870,0	381,0	806,0	14
16	392,0	1115,0	377,0	1085,0	361,0	980,0	346,0	870,0	330,0	806,0	16
18	343,0	1115,0	330,0	1085,0	316,0	980,0	303,0	870,0	289,0	806,0	18
20	303,0	1115,0	292,0	1085,0	279,0	980,0	267,0	870,0	255,0	806,0	20
22	269,0	1115,0	260,0	1045,0	248,0	978,0	238,0	870,0	226,0	806,0	22
24	241,0	1087,0	232,0	1012,0	221,0	945,0	212,0	870,0	202,0	806,0	24
26	217,0	1006,0	209,0	979,0	199,0	910,0	190,0	855,0	181,0	790,0	26
28	196,0	928,0	189,0	923,0	179,0	884,0	171,0	826,0	162,0	772,0	28
30	174,0	861,0	171,0	856,0	162,0	852,0	154,0	808,0	146,0	749,0	30
34	137,0	750,0	133,0	745,0	129,0	741,0	126,0	738,0	118,0	719,0	34
38	108,0	662,0	103,0	657,0	100,0	653,0	98,5	650,0	92,5	644,0	38
42	85,0	590,0	81,0	586,0	77,5	581,0	75,5	579,0	69,5	572,0	42
46	67,0	531,0	63,0	527,0	59,0	522,0	57,0	520,0	51,0	513,0	46
50	52,5	482,0	48,4	477,0	44,4	473,0	42,3	470,0	36,3	463,0	50
54	40,6	433,0	36,2	435,0	32,2	430,0	29,9	428,0	23,9	421,0	54
55	38,0	421,2	33,6	424,5	29,6	421,0	27,2	418,6	21,1	411,0	55
57	33,0	397,7	28,6	403,5	24,4	403,0	21,9	400,0	-	393,0	57
58	30,5	386,0	26,1	393,0	21,9	394,0	-	391,0	-	384,0	58
60	26,3	364,5	21,6	373,0	-	376,0	-	375,0	-	368,5	60
62	22,1	343,0	-	353,0	-	358,0	-	359,0	-	353,0	62
63	20,2	333,0	-	343,7	-	349,0	-	351,0	-	346,0	63
66	-	305,0	-	316,0	-	322,0	-	327,0	-	325,0	66
70	-	274,0	-	283,0	-	290,0	-	296,0	-	295,0	70
74	-	251,0	-	252,0	-	261,0	-	268,0	-	268,0	74
76	-	235,0	-	240,5	-	247,0	-	255,0	-	255,5	76
78	-	-	-	232,0	-	233,0	-	242,0	-	243,0	78
81	-	-	-	215,0	-	215,0	-	223,2	-	225,0	81
82	-	-	-	-	-	211,0	-	217,0	-	220,0	82
86	-	-	-	-	-	195,0	-	194,0	-	198,0	86
90	-	-	-	-	-	-	-	181,0	-	177,0	90
91	-	-	-	-	-	-	-	178,0	-	172,0	91
94	-	-	-	-	-	-	-	-	-	163,0	94
97	-	-	-	-	-	-	-	-	-	154,0	97

295 t + 60 t ZB | 19-30 m | 10,50 m | 9.8 m/s | 360° | ISO

	54 m		60 m		66 m		72 m		78 m		84 m		
	0 t	0-800 t	0 t	0-800 t	0 t	0-800 t	0 t	0-800 t	0 t	0-800 t	0 t	0-800 t	
m	t	t	t	t	t	t	t	t	t	t	t	t	m
10	842,0	1545,0	795,0	1517,0	-	-	-	-	-	-	-	-	10
11	762,0	1532,5	722,0	1511,5	679,0	1481,0	645,0	1351,0	-	-	-	-	11
12	682,0	1520,0	649,0	1508,0	617,0	1481,0	588,0	1351,0	560,0	1234,0	534,0	1115,0	12
14	571,0	1447,0	545,0	1435,0	521,0	1426,0	497,0	1351,0	475,0	1234,0	454,0	1115,0	14
16	488,0	1380,0	467,0	1369,0	447,0	1360,0	428,0	1351,0	410,0	1234,0	392,0	1115,0	16
18	424,0	1319,0	407,0	1307,0	390,0	1299,0	374,0	1290,0	358,0	1234,0	343,0	1115,0	18
20	368,0	1263,0	359,0	1251,0	344,0	1242,0	330,0	1234,0	316,0	1227,0	303,0	1115,0	20
22	316,0	1211,0	311,0	1199,0	306,0	1191,0	294,0	1183,0	282,0	1175,0	269,0	1115,0	22
24	275,0	1095,0	270,0	1115,0	266,0	1110,0	263,0	1105,0	252,0	1100,0	241,0	1073,0	24
26	242,0	982,0	237,0	1025,0	233,0	1019,0	230,0	1015,0	227,0	1010,0	217,0	1006,0	26
28	215,0	886,0	210,0	935,0	206,0	942,0	203,0	938,0	200,0	933,0	196,0	928,0	28
30	192,0	804,0	187,0	851,0	183,0	875,0	180,0	870,0	177,0	866,0	174,0	861,0	30
34	157,0	683,0	151,0	714,0	147,0	742,0	144,0	759,0	141,0	755,0	137,0	750,0	34
38	130,0	589,0	124,0	610,0	120,0	634,0	116,0	655,0	112,0	665,0	108,0	662,0	38
42	110,0	500,0	103,0	535,0	97,5	550,0	93,5	568,0	89,5	580,0	85,5	586,0	42
46	93,5	424,0	87,0	467,0	80,5	477,0	76,5	499,0	72,0	512,0	68,0	517,0	46
50	80,5	356,0	74,0	402,0	67,0	431,0	63,0	437,0	58,0	452,0	54,0	461,0	50
54	-	-	63,5	344,0	56,5	376,0	52,0	391,0	46,9	399,0	42,8	410,0	54
55	-	-	61,5	330,0	54,4	363,5	49,7	381,0	44,5	387,5	40,3	398,7	55
58	-	-	-	-	48,1	326,0	42,9	351,0	37,5	354,0	33,1	365,0	58
60	-	-	-	-	44,6	302,0	39,2	329,5	33,6	340,0	29,1	345,0	60
62	-	-	-	-	-	-	35,5	308,0	29,7	326,0	25,1	325,0	62
63	-	-	-	-	-	-	34,0	297,6	28,1	316,3	23,4	316,0	63
65	-	-	-	-	-	-	31,0	277,0	24,9	297,0	-	301,2	65
66	-	-	-	-	-	-	-	-	23,3	288,0	-	295,0	66
70	-	-	-	-	-	-	-	-	-	253,0	-	269,0	70
74	-	-	-	-	-	-	-	-	-	-	-	238,0	74
76	-	-	-	-	-	-	-	-	-	-	-	223,0	76

295 t + 60 t ZB | 19-30 m | 10,50 m | 9.8 m/s | 360° | ISO

	90 m		96 m		102 m		
	0 t	0-800 t	0 t	0-800 t	0 t	0-800 t	
m	t	t	t	t	t	t	m
13	471,0	1075,0	449,0	968,0	-	-	13
14	436,0	1075,0	416,0	968,0	399,0	870,0	14
16	377,0	1075,0	361,0	968,0	346,0	870,0	16
18	330,0	1075,0	316,0	968,0	303,0	870,0	18
20	292,0	1075,0	279,0	968,0	267,0	870,0	20
22	260,0	1035,0	248,0	967,0	238,0	870,0	22
24	232,0	1001,0	221,0	938,0	212,0	866,0	24
26	209,0	967,0	199,0	900,0	190,0	844,0	26
28	189,0	923,0	179,0	875,0	171,0	816,0	28
30	171,0	856,0	162,0	850,0	154,0	798,0	30
34	133,0	745,0	129,0	741,0	126,0	738,0	34
38	103,0	657,0	100,0	653,0	98,5	650,0	38
42	81,0	584,0	78,0	581,0	75,5	577,0	42
46	63,0	516,0	60,5	518,0	57,0	514,0	46
50	48,4	459,0	46,2	462,0	42,9	460,0	50
54	36,4	413,0	34,4	415,0	31,0	414,0	54
57	29,1	380,7	27,0	385,0	23,5	383,0	57
58	26,7	370,0	24,6	375,0	-	373,0	58
60	22,5	350,0	-	356,5	-	356,5	60
62	-	331,0	-	338,0	-	340,0	62
66	-	297,0	-	305,0	-	308,0	66
70	-	268,0	-	274,0	-	278,0	70
74	-	248,0	-	246,0	-	251,0	74
78	-	221,0	-	227,0	-	227,0	78
81	-	201,0	-	212,0	-	211,0	81
82	-	-	-	207,0	-	207,0	82
86	-	-	-	184,0	-	192,0	86
90	-	-	-	-	-	171,0	90
91	-	-	-	-	-	166,0	91

295 t + 60 t ZB | 19-30 m | 10,50 m | 9.8 m/s | 360° | ISO

	114 m		120 m		126 m		132 m		138 m		
	0 t	0-800 t	0 t	0-800 t	0 t	0-800 t	0 t	0-800 t	0 t	0-800 t	
m	t	t	t	t	t	t	t	t	t	t	m
16	319,0	684,0	307,0	619,0	293,0	571,0	281,0	518,0	-	-	16
18	281,0	684,0	271,0	619,0	258,0	571,0	248,0	518,0	238,0	474,0	18
20	249,0	684,0	241,0	619,0	228,0	571,0	219,0	518,0	210,0	474,0	20
22	222,0	684,0	215,0	619,0	203,0	571,0	195,0	518,0	187,0	474,0	22
24	199,0	684,0	192,0	619,0	182,0	571,0	174,0	518,0	167,0	474,0	24
26	179,0	680,0	173,0	619,0	163,0	571,0	156,0	518,0	149,0	474,0	26
28	162,0	667,0	156,0	611,0	146,0	569,0	140,0	518,0	133,0	474,0	28
30	146,0	654,0	141,0	602,0	132,0	561,0	125,0	514,0	119,0	473,0	30
34	120,0	630,0	116,0	583,0	107,0	545,0	101,0	502,0	96,0	463,0	34
38	97,5	600,0	95,5	563,0	87,0	529,0	82,0	489,0	76,5	452,0	38
42	75,0	562,0	74,0	533,0	69,0	503,0	65,5	475,0	60,5	442,0	42
46	57,0	505,0	56,0	503,0	51,0	477,0	49,1	440,0	45,5	423,0	46
50	42,6	456,0	41,3	455,0	36,3	449,0	34,3	392,0	30,6	392,0	50
54	30,5	415,0	29,1	413,0	24,0	408,0	21,9	348,0	-	349,0	54
58	20,3	380,0	-	378,0	-	372,0	-	301,0	-	312,0	58
62	-	349,0	-	347,0	-	341,0	-	253,0	-	269,0	62
66	-	322,0	-	320,0	-	314,0	-	223,0	-	229,0	66
70	-	298,0	-	296,0	-	290,0	-	204,0	-	206,0	70
74	-	272,0	-	273,0	-	268,0	-	186,0	-	188,0	74
78	-	249,0	-	251,0	-	247,0	-	167,0	-	170,0	78
82	-	228,0	-	230,0	-	227,0	-	148,0	-	152,0	82
86	-	208,0	-	211,0	-	208,0	-	133,0	-	134,0	86
90	-	189,0	-	193,0	-	191,0	-	126,0	-	120,0	90
94	-	171,0	-	176,0	-	175,0	-	120,0	-	114,0	94
98	-	154,0	-	160,0	-	159,0	-	114,0	-	108,0	98
102	-	145,0	-	144,0	-	144,0	-	107,0	-	102,0	102
106	-	-	-	134,0	-	130,0	-	101,0	-	96,0	106
110	-	-	-	-	-	119,0	-	95,0	-	89,5	110
114	-	-	-	-	-	-	-	88,5	-	83,5	114
118	-	-	-	-	-	-	-	-	-	77,5	118
122	-	-	-	-	-	-	-	-	-	71,0	122

295 t + 60 t ZB | 19-30 m | 10,50 m | 9.8 m/s | 360° | ISO

	144 m		150 m		156 m		
	0 t	0-800 t	0 t	0-800 t	0 t	0-800 t	
m	t	t	t	t	t	t	m
18	229,0	430,0	222,0	391,0	214,0	353,0	18
20	202,0	430,0	197,0	391,0	189,0	353,0	20
22	180,0	430,0	175,0	391,0	168,0	353,0	22
24	160,0	430,0	156,0	391,0	150,0	353,0	24
26	143,0	430,0	139,0	391,0	133,0	353,0	26
28	128,0	430,0	124,0	391,0	119,0	353,0	28
30	114,0	430,0	111,0	391,0	106,0	353,0	30
34	91,0	423,0	89,0	387,0	84,0	352,0	34
38	72,0	414,0	70,0	381,0	66,0	346,0	38
42	56,5	406,0	54,5	374,0	51,0	340,0	42
46	43,2	393,0	41,7	367,0	38,1	334,0	46
50	29,7	375,0	30,4	350,0	26,9	321,0	50
54	-	342,0	-	333,0	-	304,0	54
58	-	311,0	-	313,0	-	287,0	58
62	-	282,0	-	296,0	-	270,0	62
66	-	248,0	-	278,0	-	253,0	66
70	-	217,0	-	261,0	-	235,0	70
74	-	198,0	-	244,0	-	216,0	74
78	-	179,0	-	227,0	-	198,0	78
82	-	160,0	-	210,0	-	182,0	82
86	-	143,0	-	195,0	-	163,0	86
90	-	125,0	-	186,0	-	143,0	90
94	-	112,0	-	174,0	-	124,0	94
98	-	106,0	-	161,0	-	106,0	98
102	-	99,5	-	148,0	-	94,0	102
106	-	93,5	-	137,0	-	87,5	106
110	-	87,0	-	125,0	-	81,5	110
114	-	81,0	-	115,0	-	75,0	114
118	-	75,0	-	104,0	-	69,0	118
122	-	68,5	-	94,5	-	62,5	122
126	-	62,5	-	85,0	-	56,5	126
130	-	-	-	77,0	-	50,0	130
134	-	-	-	-	-	44,1	134
138	-	-	-	-	-	37,8	138

295 t + 60 t ZB | 19-30 m | 10,50 m | 9.8 m/s | 360° | ISO

	114 m		120 m		126 m		132 m		138 m		
	0 t	0-800 t	0 t	0-800 t	0 t	0-800 t	0 t	0-800 t	0 t	0-800 t	
m	t	t	t	t	t	t	t	t	t	t	m
16	319,0	684,0	307,0	619,0	293,0	571,0	281,0	518,0	-	-	16
18	281,0	684,0	271,0	619,0	258,0	571,0	248,0	518,0	238,0	474,0	18
20	249,0	684,0	241,0	619,0	228,0	571,0	219,0	518,0	210,0	474,0	20
22	222,0	684,0	215,0	619,0	203,0	571,0	195,0	518,0	187,0	474,0	22
24	199,0	684,0	192,0	619,0	182,0	571,0	174,0	518,0	167,0	474,0	24
26	179,0	680,0	173,0	619,0	163,0	571,0	156,0	518,0	149,0	474,0	26
28	162,0	667,0	156,0	611,0	146,0	569,0	140,0	518,0	133,0	474,0	28
30	146,0	654,0	141,0	602,0	132,0	561,0	125,0	514,0	119,0	473,0	30
34	120,0	630,0	116,0	583,0	107,0	545,0	101,0	502,0	96,0	463,0	34
38	97,5	600,0	95,5	563,0	87,0	529,0	82,0	489,0	76,5	452,0	38
42	75,0	562,0	74,0	533,0	69,0	503,0	65,5	475,0	60,5	442,0	42
46	57,0	505,0	56,0	503,0	51,0	477,0	49,1	451,0	45,5	423,0	46
50	42,6	456,0	41,3	455,0	36,3	449,0	34,3	428,0	30,6	404,0	50
54	30,5	415,0	29,1	413,0	24,0	408,0	21,9	405,0	-	384,0	54
58	20,3	380,0	-	378,0	-	372,0	-	370,0	-	363,0	58
62	-	349,0	-	347,0	-	341,0	-	339,0	-	332,0	62
66	-	322,0	-	320,0	-	314,0	-	312,0	-	305,0	66
70	-	298,0	-	296,0	-	290,0	-	287,0	-	281,0	70
74	-	272,0	-	273,0	-	268,0	-	264,0	-	258,0	74
78	-	249,0	-	251,0	-	247,0	-	245,0	-	240,0	78
82	-	228,0	-	230,0	-	227,0	-	225,0	-	221,0	82
86	-	208,0	-	211,0	-	208,0	-	207,0	-	204,0	86
90	-	189,0	-	193,0	-	191,0	-	191,0	-	188,0	90
94	-	171,0	-	176,0	-	175,0	-	175,0	-	173,0	94
98	-	154,0	-	160,0	-	159,0	-	160,0	-	159,0	98
102	-	145,0	-	144,0	-	144,0	-	146,0	-	145,0	102
106	-	-	-	134,0	-	130,0	-	133,0	-	133,0	106
110	-	-	-	-	-	119,0	-	120,0	-	121,0	110
114	-	-	-	-	-	-	-	108,0	-	109,0	114
118	-	-	-	-	-	-	-	-	-	97,5	118
122	-	-	-	-	-	-	-	-	-	91,0	122

295 t + 60 t ZB | 19-30 m | 10,50 m | 9.8 m/s | 360° | ISO

	144 m	
	0 t	0-800 t
m	t	t
18	229,0	430,0
20	202,0	430,0
22	180,0	430,0
24	160,0	430,0
26	143,0	430,0
28	128,0	430,0
30	114,0	430,0
34	91,0	423,0
38	72,0	414,0
42	56,5	406,0
46	43,2	393,0
50	29,7	375,0
54	-	356,0
58	-	338,0
62	-	320,0
66	-	301,0
70	-	277,0
74	-	256,0
78	-	236,0
82	-	220,0
86	-	203,0
90	-	187,0
94	-	173,0
98	-	159,0
102	-	146,0
106	-	134,0
110	-	122,0
114	-	111,0
118	-	100,0
122	-	90,0
126	-	82,5

SSL/LSL+LF

20°

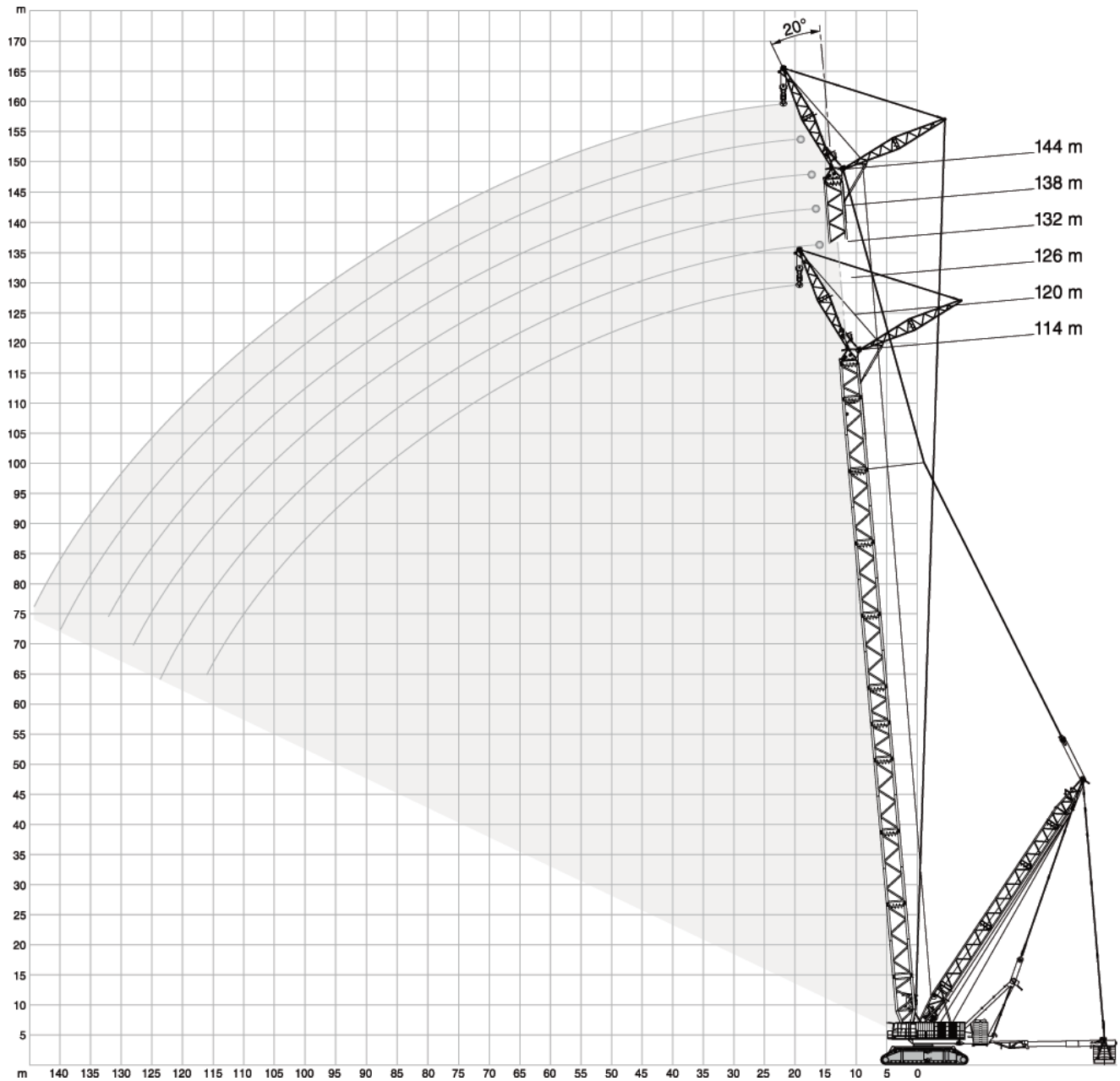

235 t + 0 t ZB | 19-30 m | 18 m | 20° | 10,50 m | 9.8 m/s | 360° | ISO

	114 m		120 m		126 m		132 m		138 m		144 m		
	0 t	0-640 t	0 t	0-640 t	0 t	0-640 t	0 t	0-640 t	0 t	0-640 t	0 t	0-640 t	
m	t	t	t	t	t	t	t	t	t	t	t	t	m
22	177,0	400,0	170,0	400,0	160,0	400,0	153,0	380,0	-	-	-	-	22
24	157,0	400,0	151,0	400,0	141,0	400,0	134,0	380,0	128,0	360,0	122,0	322,0	24
26	140,0	400,0	134,0	400,0	125,0	400,0	119,0	380,0	112,0	360,0	106,0	322,0	26
28	125,0	400,0	119,0	400,0	111,0	400,0	105,0	380,0	98,5	360,0	93,5	321,0	28
30	112,2	400,0	106,7	400,0	98,7	400,0	93,0	380,0	87,0	360,0	82,0	320,5	30
34	89,2	400,0	84,5	400,0	76,7	400,0	71,2	380,0	66,0	360,0	61,2	319,5	34
38	70,5	400,0	66,2	400,0	58,7	400,0	53,5	376,0	48,6	360,0	44,2	318,0	38
42	55,1	400,0	51,1	400,0	43,7	397,0	38,8	365,0	34,0	356,0	29,9	315,0	42
44	48,2	400,0	44,2	400,0	36,9	394,0	32,1	360,0	27,3	352,0	23,3	313,0	44
46	42,1	400,0	38,2	400,0	31,0	391,0	26,3	354,5	-	348,0	-	311,0	46
48	36,1	400,0	32,3	400,0	25,2	388,0	20,5	349,0	-	344,0	-	309,0	48
50	30,9	387,0	27,2	385,5	-	376,5	-	332,0	-	327,5	-	306,5	50
52	25,7	374,0	22,1	371,0	-	365,0	-	317,0	-	322,0	-	304,0	52
54	-	356,5	-	353,5	-	347,5	-	305,5	-	310,5	-	293,0	54
58	-	323,5	-	320,5	-	314,5	-	282,5	-	288,0	-	275,5	58
62	-	295,0	-	292,0	-	286,0	-	259,5	-	266,0	-	256,5	62
66	-	270,0	-	267,5	-	261,0	-	237,0	-	244,0	-	237,0	66
70	-	248,0	-	245,5	-	239,0	-	214,5	-	221,5	-	217,5	70
74	-	228,5	-	225,5	-	219,5	-	191,5	-	199,0	-	198,0	74
78	-	211,0	-	208,0	-	202,0	-	169,0	-	177,0	-	178,5	78
82	-	195,5	-	192,5	-	186,5	-	149,5	-	155,0	-	159,0	82
86	-	181,0	-	178,0	-	172,0	-	129,0	-	134,5	-	140,5	86
90	-	168,0	-	165,0	-	159,0	-	115,0	-	117,5	-	121,0	90
94	-	156,5	-	153,5	-	147,0	-	109,0	-	105,0	-	107,5	94
98	-	145,5	-	142,5	-	136,0	-	103,5	-	99,2	-	97,5	98
102	-	135,5	-	132,5	-	126,0	-	98,2	-	93,7	-	92,2	102
106	-	126,5	-	123,5	-	117,0	-	92,5	-	88,2	-	86,7	106
110	-	118,0	-	115,0	-	109,0	-	86,7	-	82,7	-	81,2	110
114	-	110,5	-	107,5	-	101,2	-	81,2	-	77,2	-	75,7	114
116	-	107,0	-	104,0	-	97,5	-	78,5	-	74,5	-	73,0	116
118	-	-	-	100,5	-	94,0	-	75,5	-	71,7	-	70,2	118
122	-	-	-	91,7	-	87,2	-	69,7	-	66,2	-	64,5	122
124	-	-	-	86,5	-	84,0	-	67,0	-	63,5	-	61,5	124
126	-	-	-	-	-	79,5	-	64,2	-	60,7	-	58,7	126
128	-	-	-	-	-	75,0	-	61,5	-	58,0	-	56,0	128
130	-	-	-	-	-	-	-	58,5	-	55,2	-	53,2	130
132	-	-	-	-	-	-	-	55,5	-	52,5	-	50,5	132
134	-	-	-	-	-	-	-	-	-	49,8	-	47,9	134
138	-	-	-	-	-	-	-	-	-	44,3	-	42,6	138
140	-	-	-	-	-	-	-	-	-	41,6	-	39,8	140
142	-	-	-	-	-	-	-	-	-	-	-	37,0	142
144	-	-	-	-	-	-	-	-	-	-	-	34,3	144

SWSL, SWSL S1

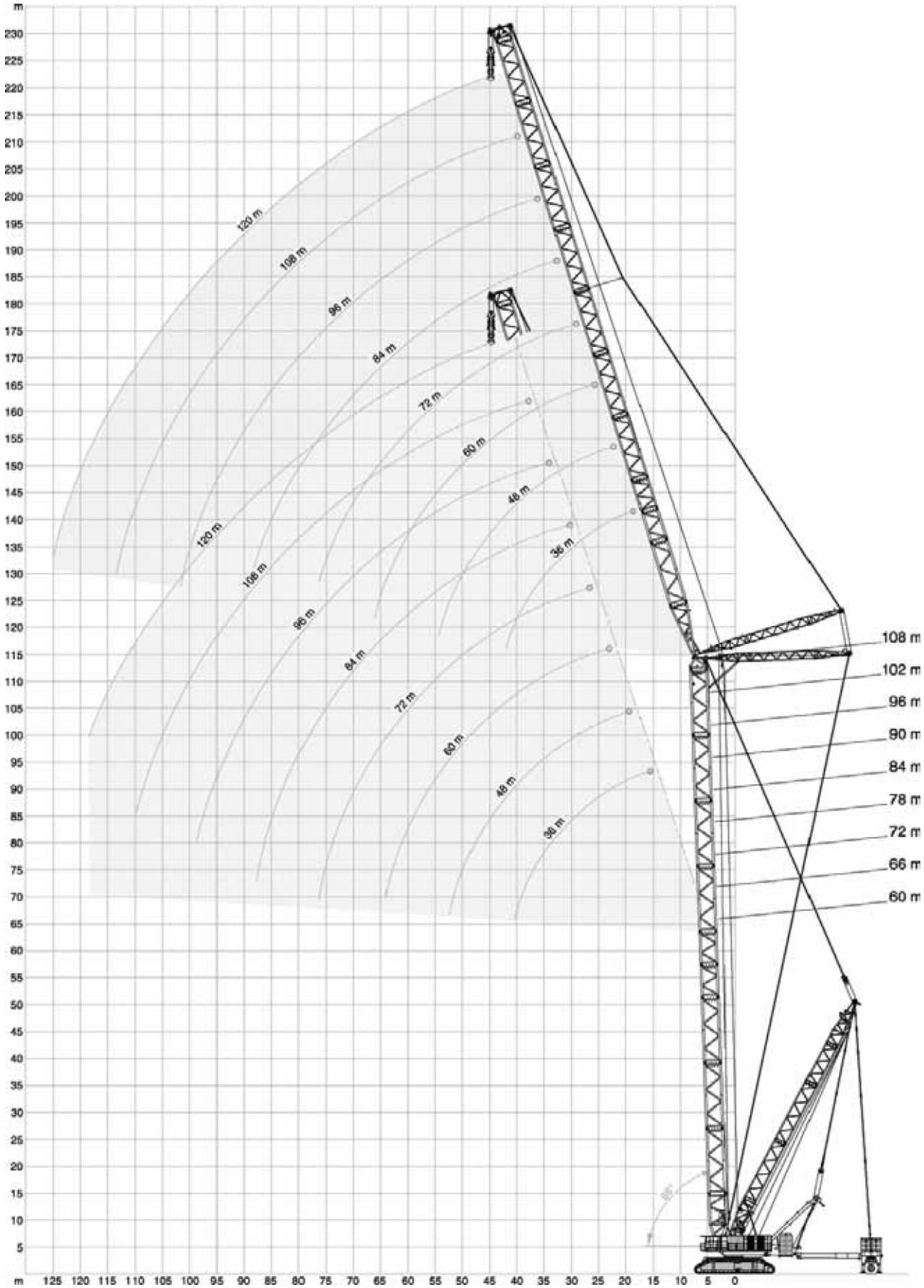

295 t + 60 t ZB · 19-30 m · 10,50 m · 9.8 m/s · 360° · ISO

60 m + 36 m

	SWSL					SFSL
	0 t	0 t - 800 t				
	85°	85°	75°	65°	55°	15°
m	t	t	t	t	t	t
18	-	793,0*	-	-	-	-
20	-	783,0*	-	-	-	-
22	-	764,0*	-	-	-	-
24	276,0	800,0	-	-	-	785,0
26	254,0	730,0	-	-	-	783,0
28	235,0	647,0	-	-	-	779,0
30	219,0	580,0	-	-	-	745,0
34	190,0	479,0	-	-	-	678,0
38	162,0	405,0	-	-	-	622,0
39	156,0	390,5	625,0	-	-	609,0
42	140,0	350,0	535,0	-	-	566,5
46	-	-	447,0	-	-	507,0
50	-	-	382,0	-	-	449,0
52	-	-	355,0	-	-	421,0
54	-	-	-	421,0	-	396,5
58	-	-	-	386,0	-	351,0
62	-	-	-	354,0	-	312,5
63	-	-	-	343,0	-	303,7
66	-	-	-	-	-	278,0
67	-	-	-	-	288,0	269,5
70	-	-	-	-	273,0	248,5
72	-	-	-	-	263,0	238,0
74	-	-	-	-	-	226,0
78	-	-	-	-	-	201,0
82	-	-	-	-	-	176,0
86	-	-	-	-	-	152,5
88	-	-	-	-	-	141,0

60 m + 48 m

m	t	t	t	t	t	t
22	-	629,0*	-	-	-	-
24	-	623,0*	-	-	-	-
26	-	610,0*	-	-	-	-
28	219,0	661,0	-	-	-	649,0
30	203,0	621,0	-	-	-	640,0
34	177,0	512,0	-	-	-	609,0
38	156,0	433,0	-	-	-	556,0
42	134,0	373,0	-	-	-	512,0
45	120,5	337,0	498,0	-	-	481,7
46	116,0	326,0	477,0	-	-	472,5
50	102,0	289,0	407,0	-	-	438,0
54	90,5	240,0	353,0	-	-	404,0
58	-	-	310,0	-	-	365,0
62	-	-	276,0	347,0	-	325,0
64	-	-	262,0	333,0	-	306,0
66	-	-	-	321,0	-	290,0
70	-	-	-	292,0	-	260,5
74	-	-	-	261,0	-	233,5
75	-	-	-	255,0	-	226,7
76	-	-	-	-	236,0	220,0
78	-	-	-	-	229,0	210,0
82	-	-	-	-	216,0	193,0
84	-	-	-	-	210,0	184,0
86	-	-	-	-	-	173,5
90	-	-	-	-	-	153,0
94	-	-	-	-	-	133,5
98	-	-	-	-	-	114,5
100	-	-	-	-	-	105,0

* Main boom angle 88° · Hauptauslegerwinkel 88° · Jarret de flèche principale 88° · Inclinazione braccio base 88° · Ángulo de pluma principal 88° · Ângulo da lança principal 88° · Угол подъема гл. стрелы 88°

60 m + 60 m

	SWSL					SFSL
	0 t	0 t - 800 t				
	85°	85°	75°	65°	55°	15°
m	t	t	t	t	t	t
26	-	504,0*	-	-	-	-
28	-	500,0*	-	-	-	-
30	-	492,0*	-	-	-	-
32	177,0	532,0	-	-	-	522,0
34	166,0	528,0	-	-	-	516,0
38	145,0	449,0	-	-	-	507,0
42	129,0	387,0	-	-	-	467,5
46	113,0	338,0	-	-	-	431,0
50	99,0	299,0	-	-	-	398,5
52	93,0	282,0	392,0	-	-	383,0
54	87,0	266,0	366,0	-	-	369,5
58	76,5	237,0	321,0	-	-	344,0
62	67,5	205,0	285,0	-	-	322,5
66	60,5	172,0	255,0	-	-	300,0
69	-	-	236,0	298,0	-	279,7
70	-	-	230,0	293,0	-	272,5
74	-	-	205,0	269,0	-	245,5
76	-	-	189,0	255,0	-	233,0
78	-	-	-	242,0	-	221,0
82	-	-	-	218,0	-	199,0
86	-	-	-	199,0	197,0	180,5
90	-	-	-	-	186,0	166,5
94	-	-	-	-	177,0	151,0
95	-	-	-	-	175,0	146,5
98	-	-	-	-	-	133,5
102	-	-	-	-	-	117,5
106	-	-	-	-	-	102,5
108	-	-	-	-	-	95,0

60 m + 72 m

m	t	t	t	t	t	t
30	-	407,0*	-	-	-	-
34	-	399,0*	-	-	-	-
36	144,0	426,0	-	-	-	417,0
38	135,0	426,0	-	-	-	416,0
42	119,0	388,0	-	-	-	411,5
46	106,0	338,0	-	-	-	393,5
50	94,5	298,0	-	-	-	362,5
54	84,0	265,0	-	-	-	335,5
58	73,0	237,0	321,0	-	-	311,5
62	64,0	214,0	284,0	-	-	290,5
66	56,0	193,0	253,0	-	-	272,0
70	49,0	170,0	228,0	-	-	255,5
74	43,5	148,0	206,0	-	-	241,5
76	41,0	137,0	196,0	-	-	235,0
77	-	-	191,5	246,0	-	231,2
78	-	-	187,0	239,0	-	227,5
82	-	-	171,0	216,0	-	209,0
86	-	-	150,0	196,0	-	188,5
90	-	-	-	179,0	-	171,0
94	-	-	-	163,0	-	156,0
95	-	-	-	160,0	168,0	153,0
96	-	-	-	157,0	165,0	150,0
98	-	-	-	-	161,0	144,0
102	-	-	-	-	153,0	130,5
106	-	-	-	-	146,0	116,0
110	-	-	-	-	-	102,5
114	-	-	-	-	-	89,7
118	-	-	-	-	-	77,2
120	-	-	-	-	-	71,0

For explanations see page 22 · Bemerkungen siehe Seite 22 · Pour plus de détails, voir page 22 · Per spiegazioni vedere a pagina 22 · Véase p. 22 para más información · Para explicações, ver página 22 · Объяснения см. на стр. 22

SWSL/SFSL

295 t + 60 t ZB | 19-30 m | 10,50 m | 9.8 m/s | 360° | ISO

60 m + 84 m

	SWSL					SFSL
	0 t	0 t - 800 t				
	85°	85°	75°	65°	55°	15°
m	t	t	t	t	t	t
32	-	325,0*	-	-	-	-
34	-	325,0*	-	-	-	-
38	-	317,0*	-	-	-	-
40	117,0	331,0	-	-	-	325,0
42	110,0	331,0	-	-	-	323,5
46	97,0	326,0	-	-	-	321,0
50	86,0	298,0	-	-	-	319,0
54	76,5	265,0	-	-	-	308,0
58	68,0	237,0	-	-	-	288,0
62	60,5	213,0	-	-	-	268,0
64	57,0	203,0	268,0	-	-	258,0
66	53,0	193,0	253,0	-	-	249,5
70	46,0	175,0	227,0	-	-	233,0
74	40,0	160,0	205,0	-	-	218,5
78	34,5	145,0	186,0	-	-	206,0
82	30,2	128,0	169,0	-	-	195,0
86	26,0	112,0	155,0	195,0	-	184,5
88	24,0	104,0	148,0	185,0	-	179,0
90	-	-	142,0	177,0	-	174,5
94	-	-	131,0	162,0	-	162,0
98	-	-	115,0	148,0	-	147,5
102	-	-	-	136,0	-	135,0
104	-	-	-	131,0	143,0	130,0
106	-	-	-	125,0	140,0	125,0
108	-	-	-	120,0	136,0	120,0
110	-	-	-	-	133,0	113,5
114	-	-	-	-	126,0	101,5
118	-	-	-	-	119,0	90,0
122	-	-	-	-	-	78,5
126	-	-	-	-	-	67,5
130	-	-	-	-	-	56,5
132	-	-	-	-	-	51,0
134	-	-	-	-	-	-
138	-	-	-	-	-	-
142	-	-	-	-	-	-

60 m + 96 m

	SWSL					SFSL
	0 t	0 t - 800 t				
	85°	85°	75°	65°	55°	15°
m	t	t	t	t	t	t
36	-	254,0*	-	-	-	-
38	-	254,0*	-	-	-	-
42	-	248,0*	-	-	-	-
44	95,5	257,0	-	-	-	251,0
46	89,5	257,0	-	-	-	249,5
50	79,0	250,0	-	-	-	246,0
54	69,5	243,0	-	-	-	242,0
58	61,5	235,0	-	-	-	237,5
62	54,5	212,0	-	-	-	232,0
66	48,0	192,0	-	-	-	226,0
70	42,5	174,0	226,0	-	-	216,0
74	37,0	158,0	203,0	-	-	202,0
78	31,5	145,0	184,0	-	-	189,0
82	26,7	133,0	168,0	-	-	177,5
86	22,5	121,5	153,0	-	-	167,5
88	20,5	116,0	146,0	-	-	163,0
90	-	109,5	140,0	-	-	158,5
94	-	97,0	128,0	160,0	-	150,0
98	-	84,7	118,0	146,0	-	142,5
100	-	78,5	113,0	140,0	-	139,0
102	-	-	109,0	134,0	-	135,0
106	-	-	100,0	123,0	-	126,5
110	-	-	88,0	113,0	-	117,5
113	-	-	-	107,0	123,0	110,7
114	-	-	-	105,0	121,0	108,5
118	-	-	-	97,0	115,0	98,5
120	-	-	-	93,0	111,0	93,0
122	-	-	-	-	107,0	88,0
126	-	-	-	-	99,0	77,7
128	-	-	-	-	95,5	72,5
130	-	-	-	-	-	67,7
134	-	-	-	-	-	58,0
138	-	-	-	-	-	48,5
142	-	-	-	-	-	39,2
144	-	-	-	-	-	34,5

* Main boom angle 88° · Hauptauslegerwinkel 88° · Jarret de flèche principale 88° · Inclinazione braccio base 88° · Ángulo de pluma principal 88° · Ângulo da lança principal 88° · Угол подъема гл. стрелы 88°

Main boom angle 88°, 85°, 75°, 65° and 55°, capacities for intermediate boom positions are calculated by the crane control system IC-1
Hauptauslegerwinkel 88°, 85°, 75°, 65° und 55°, Traglasten für Zwischenstellungen des Hauptauslegers werden von der Kransteuerung IC-1 berechnet
Jarret de flèche principale 88°, 85°, 75°, 65° et 55°, le système de commande de la grue IC-1 calcule les charges pour les positions intermédiaires de la flèche
Inclinazione braccio base 88°, 85°, 75°, 65° e 55°, capacità per posizioni intermedie del braccio sono calcolate dal sistema di controllo della gru IC-1
Ángulo de pluma principal 88°, 85°, 75°, 65° y 55° las capacidades para posiciones de pluma intermedias son calculadas por el sistema de control de grúa IC-1
Ângulos da lança principal 88°, 85°, 75°, 65° e 55°; as capacidades para posições da lança intermediária são calculadas pelo sistema de controle da grua IC-1
Грузоподъемность при углах подъема главной стрелы 88°, 85°, 75°, 65° и 55°, грузоподъемность в промежуточных положениях стрелы расчитывается системой управления краном IC-1

295 t + 60 t ZB | 19-30 m | 10,50 m | 9.8 m/s | 360° | ISO

60 m + 108 m

	SWSL					SFSL
	0 t	0 t - 800 t				
	85°	85°	75°	65°	55°	15°
m	t	t	t	t	t	t
40	-	193,0*	-	-	-	-
42	-	193,0*	-	-	-	-
46	-	188,0*	-	-	-	-
48	76,5	192,0	-	-	-	189,0
50	71,5	192,0	-	-	-	188,0
54	63,0	188,0	-	-	-	185,0
58	55,0	183,0	-	-	-	182,0
62	48,0	178,0	-	-	-	179,0
66	42,0	173,0	-	-	-	175,0
70	36,5	167,0	-	-	-	170,5
74	31,5	157,0	-	-	-	165,5
76	29,0	150,0	169,0	-	-	163,0
78	27,0	143,0	169,0	-	-	160,5
82	22,7	131,0	166,0	-	-	156,0
84	21,0	125,0	158,0	-	-	154,0
86	-	120,0	151,0	-	-	152,0
90	-	110,5	138,0	-	-	146,0
94	-	101,7	126,0	-	-	137,5
98	-	92,7	116,0	-	-	129,5
100	-	88,0	111,0	138,0	-	126,0
102	-	83,0	107,0	132,0	-	123,0
106	-	73,0	98,5	121,0	-	116,5
108	-	68,0	94,5	116,0	-	113,0
110	-	-	90,5	111,0	-	110,0
114	-	-	83,5	102,0	-	104,0
118	-	-	76,0	94,5	-	99,0
122	-	-	66,5	87,0	98,0	93,2
126	-	-	-	80,5	96,5	84,7
130	-	-	-	74,0	89,0	75,5
132	-	-	-	71,5	85,5	71,0
134	-	-	-	-	82,5	66,5
138	-	-	-	-	76,0	57,5
140	-	-	-	-	73,0	53,0
142	-	-	-	-	-	48,7
146	-	-	-	-	-	40,5
150	-	-	-	-	-	32,2
154	-	-	-	-	-	24,0
156	-	-	-	-	-	20,0
158	-	-	-	-	-	-

60 m + 120 m

	SWSL					SFSL
	0 t	0 t - 800 t				
	85°	85°	75°	65°	55°	15°
m	t	t	t	t	t	t
44	-	146,0*	-	-	-	-
46	-	145,0*	-	-	-	-
50	-	142,0*	-	-	-	-
52	60,0	143,0	-	-	-	140,0
54	56,0	143,0	-	-	-	139,5
58	48,5	141,0	-	-	-	138,0
62	41,5	138,0	-	-	-	135,5
66	35,5	134,0	-	-	-	132,5
70	30,5	130,0	-	-	-	129,0
74	25,5	124,0	-	-	-	125,5
78	21,0	118,0	-	-	-	122,0
82	-	111,0	116,0	-	-	117,5
86	-	104,5	115,0	-	-	113,0
90	-	98,0	109,0	-	-	108,5
94	-	92,0	102,0	-	-	104,5
98	-	86,2	96,5	-	-	101,0
102	-	80,7	90,5	-	-	97,0
106	-	74,7	84,5	-	-	92,7
108	-	71,5	81,0	88,5	-	90,5
110	-	67,5	78,0	88,5	-	88,7
114	-	59,5	72,5	84,5	-	84,7
118	-	51,7	68,0	79,5	-	80,5
120	-	48,0	65,5	77,0	-	78,5
122	-	-	63,0	74,5	-	76,7
126	-	-	58,2	69,5	-	73,5
130	-	-	53,5	64,5	-	70,2
132	-	-	51,0	62,0	67,5	68,5
134	-	-	-	60,0	67,5	66,2
138	-	-	-	56,0	65,5	61,0
142	-	-	-	52,0	61,0	53,7
146	-	-	-	-	56,5	46,0
150	-	-	-	-	53,0	38,5
152	-	-	-	-	51,0	35,0
154	-	-	-	-	-	31,2
158	-	-	-	-	-	24,0
160	-	-	-	-	-	20,5
162	-	-	-	-	-	-
166	-	-	-	-	-	-
170	-	-	-	-	-	-

* Main boom angle 88° · Hauptauslegerwinkel 88° · Jarret de flèche principale 88° · Inclinazione braccio base 88° · Ángulo de pluma principal 88° · Ângulo da lança principal 88° · Угол подъема гл. стрелы 88°

Main boom angle 88°, 85°, 75°, 65° and 55°, capacities for intermediate boom positions are calculated by the crane control system IC-1
Hauptauslegerwinkel 88°, 85°, 75°, 65° und 55°, Traglasten für Zwischenstellungen des Hauptauslegers werden von der Kransteuerung IC-1 berechnet
Jarret de flèche principale 88°, 85°, 75°, 65° et 55°, le système de commande de la grue IC-1 calcule les charges pour les positions intermédiaires de la flèche
Inclinazione braccio base 88°, 85°, 75°, 65° e 55°, capacità per posizioni intermedie del braccio sono calcolate dal sistema di controllo della gru IC-1
Ángulo de pluma principal 88°, 85°, 75°, 65° y 55° las capacidades para posiciones de pluma intermedias son calculadas por el sistema de control de grúa IC-1
Ângulos da lança principal 88°, 85°, 75°, 65° e 55°; as capacidades para posições da lança intermediária são calculadas pelo sistema de controle da grua IC-1
Грузоподъемность при углах подъема главной стрелы 88°, 85°, 75°, 65° и 55°, грузоподъемность в промежуточных положениях стрелы расчитывается системой управления краном IC-1

295 t + 60 t ZB | 19-30 m | 10,50 m | 9.8 m/s | 360° | ISO

66 m + 36 m

	SWSL					SFSL
	0 t	0 t - 800 t				
	85°	85°	75°	65°	55°	15°
m	t	t	t	t	t	t
18	-	733,0*	-	-	-	-
20	-	721,0*	-	-	-	-
22	-	702,0*	-	-	-	-
24	265,0	771,0	-	-	-	758,0
26	244,0	753,0	-	-	-	747,0
28	226,0	666,0	-	-	-	733,0
30	210,0	595,0	-	-	-	725,0
34	184,0	489,0	-	-	-	696,0
38	159,0	413,0	-	-	-	640,0
41	142,0	369,0	590,0	-	-	585,0
42	137,0	356,0	577,0	-	-	568,0
46	-	-	476,0	-	-	505,0
50	-	-	404,0	-	-	452,0
54	-	-	349,0	-	-	406,0
57	-	-	-	398,0	-	373,2
58	-	-	-	390,0	-	362,5
62	-	-	-	360,0	-	322,5
66	-	-	-	334,0	-	288,5
70	-	-	-	-	-	258,0
71	-	-	-	-	270,0	250,5
74	-	-	-	-	256,0	229,0
76	-	-	-	-	248,0	215,0
78	-	-	-	-	-	204,5
82	-	-	-	-	-	186,5
86	-	-	-	-	-	166,0
90	-	-	-	-	-	144,5
92	-	-	-	-	-	134,0

66 m + 48 m

m	t	t	t	t	t	t
22	-	586,0*	-	-	-	-
24	-	579,0*	-	-	-	-
26	-	567,0*	-	-	-	-
28	210,0	622,0	-	-	-	610,0
30	195,0	616,0	-	-	-	604,0
34	170,0	523,0	-	-	-	588,0
38	150,0	440,0	-	-	-	569,0
42	131,0	379,0	-	-	-	524,5
46	114,0	330,0	-	-	-	485,5
47	110,0	320,0	487,0	-	-	476,2
50	100,0	292,0	431,0	-	-	449,5
54	88,5	248,0	371,0	-	-	411,5
58	-	-	325,0	-	-	372,0
62	-	-	287,0	-	-	334,5
64	-	-	272,0	331,0	-	316,0
66	-	-	257,0	324,0	-	299,5
70	-	-	-	301,0	-	268,5
74	-	-	-	279,0	-	241,5
77	-	-	-	257,0	-	223,2
78	-	-	-	-	-	217,5
80	-	-	-	-	222,0	206,0
82	-	-	-	-	215,0	194,5
86	-	-	-	-	202,0	173,5
87	-	-	-	-	199,0	169,7
90	-	-	-	-	-	159,0
94	-	-	-	-	-	143,0
98	-	-	-	-	-	125,0
102	-	-	-	-	-	107,7
104	-	-	-	-	-	99,5

66 m + 60 m

	SWSL					SFSL
	0 t	0 t - 800 t				
	85°	85°	75°	65°	55°	15°
m	t	t	t	t	t	t
26	-	474,0*	-	-	-	-
28	-	470,0*	-	-	-	-
30	-	462,0*	-	-	-	-
32	170,0	501,0	-	-	-	491,0
34	159,0	501,0	-	-	-	490,0
38	139,0	458,0	-	-	-	480,0
42	123,0	393,0	-	-	-	467,0
46	110,0	343,0	-	-	-	440,0
50	97,0	302,0	-	-	-	408,0
54	85,0	269,0	385,0	-	-	380,0
58	74,5	242,0	336,0	-	-	355,0
62	65,5	210,0	297,0	-	-	332,5
66	58,0	178,0	265,0	-	-	309,0
70	-	-	239,0	-	-	281,0
72	-	-	227,0	285,0	-	266,0
74	-	-	216,0	275,0	-	253,0
78	-	-	186,0	257,0	-	228,0
82	-	-	-	233,0	-	206,5
86	-	-	-	211,0	-	187,0
88	-	-	-	202,0	-	177,0
89	-	-	-	-	186,0	172,2
90	-	-	-	-	183,0	167,5
94	-	-	-	-	173,0	149,5
98	-	-	-	-	164,0	138,0
102	-	-	-	-	-	125,0
106	-	-	-	-	-	110,0
110	-	-	-	-	-	96,0
114	-	-	-	-	-	82,0
116	-	-	-	-	-	75,0

66 m + 72 m

m	t	t	t	t	t	t
30	-	384,0*	-	-	-	-
34	-	376,0*	-	-	-	-
36	137,0	403,0	-	-	-	395,0
38	129,0	403,0	-	-	-	394,0
42	114,0	395,0	-	-	-	390,0
46	101,0	346,0	-	-	-	388,0
50	90,0	304,0	-	-	-	373,5
54	80,5	270,0	-	-	-	347,5
58	71,0	242,0	-	-	-	323,5
60	66,5	230,0	318,0	-	-	312,0
62	62,0	218,0	299,0	-	-	302,0
66	54,0	197,0	266,0	-	-	282,5
70	47,5	174,0	239,0	-	-	265,0
74	41,5	151,0	215,0	-	-	250,5
78	37,0	129,0	195,0	-	-	235,5
80	-	-	186,0	243,0	-	227,0
82	-	-	178,0	232,0	-	216,0
86	-	-	159,0	210,0	-	195,5
88	-	-	148,0	200,0	-	186,0
90	-	-	-	190,0	-	176,5
94	-	-	-	174,0	-	159,5
98	-	-	-	159,0	157,0	144,5
100	-	-	-	152,0	152,0	137,0
102	-	-	-	-	148,0	129,0
106	-	-	-	-	140,0	119,5
110	-	-	-	-	133,0	108,5
114	-	-	-	-	-	96,0
118	-	-	-	-	-	84,0
122	-	-	-	-	-	72,0
124	-	-	-	-	-	66,0

SWSL/SFSL

295 t + 60 t ZB | 19-30 m | 10,50 m | 9.8 m/s | 360° | ISO

66 m + 84 m

	SWSL					SFSL
	0 t	0 t - 800 t				
	85°	85°	75°	65°	55°	15°
m	t	t	t	t	t	t
34	-	310,0*	-	-	-	-
38	-	302,0*	-	-	-	-
40	111,0	316,0	-	-	-	310,0
42	104,0	316,0	-	-	-	309,5
46	92,0	312,0	-	-	-	308,5
50	81,5	305,0	-	-	-	307,0
54	72,5	271,0	-	-	-	304,0
58	64,5	242,0	-	-	-	294,5
62	57,0	218,0	-	-	-	277,0
66	51,0	197,0	266,0	-	-	258,5
70	44,5	179,0	238,0	-	-	242,5
74	38,5	163,0	215,0	-	-	227,5
78	33,0	147,0	194,0	-	-	214,0
82	28,5	131,0	177,0	-	-	202,5
86	24,5	114,5	161,0	-	-	191,5
88	22,5	106,0	154,0	199,0	-	186,0
90	-	-	148,0	189,0	-	181,0
94	-	-	136,0	172,0	-	168,0
98	-	-	121,0	158,0	-	152,0
100	-	-	113,0	151,0	-	144,0
102	-	-	-	145,0	-	138,0
106	-	-	-	133,0	-	125,0
107	-	-	-	130,5	133,0	121,5
110	-	-	-	123,0	127,0	111,5
114	-	-	-	-	120,0	102,7
118	-	-	-	-	114,0	93,7
120	-	-	-	-	111,0	89,0
122	-	-	-	-	-	83,5
126	-	-	-	-	-	72,7
130	-	-	-	-	-	62,5
134	-	-	-	-	-	52,0
136	-	-	-	-	-	46,5
138	-	-	-	-	-	-

* Main boom angle 88° · Hauptauslegerwinkel 88° · Jarret de flèche principale 88° · Inclinazione braccio base 88° · Ángulo de pluma principal 88° · Ângulo da lança principal 88° · Угол подъема гл. стрелы 88°

66 m + 96 m

	SWSL					SFSL
	0 t	0 t - 800 t				
	85°	85°	75°	65°	55°	15°
m	t	t	t	t	t	t
36	-	244,0*	-	-	-	-
38	-	244,0*	-	-	-	-
42	-	238,0*	-	-	-	-
44	90,0	246,0	-	-	-	242,0
46	84,5	246,0	-	-	-	240,5
50	74,5	242,0	-	-	-	237,5
54	65,5	236,0	-	-	-	234,5
58	58,0	228,0	-	-	-	231,0
62	51,0	217,0	-	-	-	226,0
66	45,0	196,0	-	-	-	220,5
70	39,5	177,0	-	-	-	215,0
72	37,0	169,0	223,0	-	-	212,0
74	34,5	162,0	213,0	-	-	207,0
78	30,0	148,0	193,0	-	-	196,0
82	25,2	135,5	175,0	-	-	184,5
84	23,0	130,0	167,0	-	-	179,0
86	-	124,0	160,0	-	-	174,0
90	-	111,5	146,0	-	-	165,0
94	-	99,0	134,0	-	-	156,5
96	-	93,0	128,0	163,0	-	152,0
98	-	86,7	123,0	156,0	-	148,0
100	-	80,5	118,0	149,0	-	144,0
102	-	-	113,0	143,0	-	141,0
106	-	-	104,0	131,0	-	131,0
110	-	-	93,0	120,0	-	119,0
112	-	-	87,0	115,0	-	114,0
114	-	-	-	111,0	-	107,5
117	-	-	-	104,0	110,0	98,5
118	-	-	-	102,0	109,0	96,0
122	-	-	-	95,0	103,0	88,5
126	-	-	-	-	98,5	80,7
130	-	-	-	-	94,0	71,7
132	-	-	-	-	92,0	67,0
134	-	-	-	-	-	62,5
138	-	-	-	-	-	53,2
142	-	-	-	-	-	44,0
146	-	-	-	-	-	35,2
148	-	-	-	-	-	31,0

Main boom angle 88°, 85°, 75°, 65° and 55°, capacities for intermediate boom positions are calculated by the crane control system IC-1
Hauptauslegerwinkel 88°, 85°, 75°, 65° und 55°, Traglasten für Zwischenstellungen des Hauptauslegers werden von der Kransteuerung IC-1 berechnet
Jarret de flèche principale 88°, 85°, 75°, 65° et 55°, le système de commande de la grue IC-1 calcule les charges pour les positions intermédiaires de la flèche
Inclinazione braccio base 88°, 85°, 75°, 65° e 55°, capacità per posizioni intermedie del braccio sono calcolate dal sistema di controllo della gru IC-1
Ángulo de pluma principal 88°, 85°, 75°, 65° y 55° las capacidades para posiciones de pluma intermedias son calculadas por el sistema de control de grúa IC-1
Ângulos da lança principal 88°, 85°, 75°, 65° e 55°; as capacidades para posições da lança intermediária são calculadas pelo sistema de controle da grua IC-1
Грузоподъемность при углах подъема главной стрелы 88°, 85°, 75°, 65° и 55°, грузоподъемность в промежуточных положениях стрелы расчитывается системой управления краном IC-1

SWSL/SFSL

295 t + 60 t ZB | 19-30 m | 10,50 m | 9.8 m/s | 360° | ISO

66 m + 108 m

	SWSL					SFSL
	0 t	0 t - 800 t				
	85°	85°	75°	65°	55°	15°
m	t	t	t	t	t	t
40	-	187,0*	-	-	-	-
42	-	187,0*	-	-	-	-
46	-	182,0*	-	-	-	-
48	72,0	185,0	-	-	-	182,0
50	67,5	185,0	-	-	-	182,0
54	58,5	182,0	-	-	-	180,5
58	51,5	178,0	-	-	-	177,5
62	44,5	173,0	-	-	-	174,5
66	38,5	168,0	-	-	-	170,5
70	33,5	163,0	-	-	-	166,0
74	28,5	158,0	-	-	-	162,0
78	24,0	146,0	165,0	-	-	158,0
80	22,0	140,0	165,0	-	-	156,0
82	-	134,0	164,0	-	-	153,5
86	-	122,5	158,0	-	-	149,0
90	-	112,5	144,0	-	-	145,5
94	-	103,7	132,0	-	-	141,5
98	-	94,5	121,0	-	-	135,5
102	-	84,5	111,0	-	-	128,5
104	-	79,5	107,0	135,0	-	125,0
106	-	74,7	102,0	129,0	-	121,5
110	-	65,0	94,5	118,0	-	115,5
112	-	60,0	90,5	113,0	-	113,0
114	-	-	87,0	109,0	-	110,0
118	-	-	80,0	100,0	-	102,2
122	-	-	70,5	92,5	-	92,5
126	-	-	-	85,5	93,0	82,7
130	-	-	-	79,0	89,0	76,0
134	-	-	-	73,0	84,5	69,0
138	-	-	-	-	80,5	61,2
142	-	-	-	-	76,0	52,7
144	-	-	-	-	73,0	48,5
146	-	-	-	-	-	44,5
150	-	-	-	-	-	36,5
154	-	-	-	-	-	28,5
156	-	-	-	-	-	24,5
158	-	-	-	-	-	-

66 m + 120 m

	SWSL					SFSL
	0 t	0 t - 800 t				
	85°	85°	75°	65°	55°	15°
m	t	t	t	t	t	t
44	-	141,0*	-	-	-	-
46	-	141,0*	-	-	-	-
50	-	138,0*	-	-	-	-
52	55,5	135,0	-	-	-	136,0
54	52,0	135,0	-	-	-	135,5
58	44,5	132,0	-	-	-	134,0
62	38,0	129,0	-	-	-	131,5
66	32,5	126,0	-	-	-	128,5
70	27,0	122,0	-	-	-	126,0
74	22,5	116,0	-	-	-	123,0
76	20,5	113,0	-	-	-	121,0
78	-	110,0	-	-	-	119,0
82	-	104,0	-	-	-	116,0
84	-	101,0	115,0	-	-	115,0
86	-	97,7	115,0	-	-	112,5
90	-	91,2	109,0	-	-	108,0
94	-	85,2	103,0	-	-	103,5
98	-	80,0	98,0	-	-	99,5
102	-	75,0	92,0	-	-	96,5
106	-	70,0	86,0	-	-	93,0
110	-	65,0	80,0	86,5	-	89,0
114	-	59,7	74,0	86,5	-	85,5
118	-	53,0	69,0	82,0	-	82,0
120	-	49,0	67,0	80,0	-	80,0
122	-	-	64,5	77,0	-	78,0
126	-	-	59,7	72,5	-	74,2
130	-	-	55,5	67,5	-	71,2
134	-	-	50,5	62,5	-	67,5
136	-	-	-	60,5	67,0	65,5
138	-	-	-	58,5	67,0	62,5
142	-	-	-	54,5	65,0	56,0
146	-	-	-	50,5	60,0	49,0
150	-	-	-	-	56,0	41,5
154	-	-	-	-	52,0	34,0
158	-	-	-	-	-	27,0
160	-	-	-	-	-	23,5
162	-	-	-	-	-	-

* Main boom angle 88° · Hauptauslegerwinkel 88° · Jarret de flèche principale 88° · Inclinazione braccio base 88° · Ángulo de pluma principal 88° · Ângulo da lança principal 88° · Угол подъема гл. стрелы 88°

Main boom angle 88°, 85°, 75°, 65° and 55°, capacities for intermediate boom positions are calculated by the crane control system IC-1
Hauptauslegerwinkel 88°, 85°, 75°, 65° und 55°, Traglasten für Zwischenstellungen des Hauptauslegers werden von der Kransteuerung IC-1 berechnet
Jarret de flèche principale 88°, 85°, 75°, 65° et 55°, le système de commande de la grue IC-1 calcule les charges pour les positions intermédiaires de la flèche
Inclinazione braccio base 88°, 85°, 75°, 65° e 55°, capacità per posizioni intermedie del braccio sono calcolate dal sistema di controllo della gru IC-1
Ángulo de pluma principal 88°, 85°, 75°, 65° y 55° las capacidades para posiciones de pluma intermedias son calculadas por el sistema de control de grúa IC-1
Ângulos da lança principal 88°, 85°, 75°, 65° e 55°; as capacidades para posições da lança intermediária são calculadas pelo sistema de controle da grua IC-1
Грузоподъемность при углах подъема главной стрелы 88°, 85°, 75°, 65° и 55°, грузоподъемность в промежуточных положениях стрелы расчитывается системой управления краном IC-1

SWSL/SFSL

295 t + 60 t ZB | 19-30 m | 10,50 m | 9.8 m/s | 360° | ISO

72 m + 36 m

	SWSL					SFSL
	0 t	0 t - 800 t				
	85°	85°	75°	65°	55°	15°
m	t	t	t	t	t	t
20	-	661,0*	-	-	-	-
22	-	641,0*	-	-	-	-
24	253,0	705,0	-	-	-	692,0
26	234,0	702,0	-	-	-	688,0
28	217,0	683,0	-	-	-	677,0
30	202,0	611,0	-	-	-	671,0
34	176,0	500,0	-	-	-	664,0
38	156,0	420,0	-	-	-	621,0
42	135,0	361,0	569,0	-	-	563,5
44	125,0	337,0	563,0	-	-	529,0
46	-	-	510,0	-	-	500,5
50	-	-	428,0	-	-	447,5
54	-	-	367,0	-	-	403,0
56	-	-	342,0	-	-	383,0
58	-	-	-	-	-	365,5
59	-	-	-	381,0	-	356,7
62	-	-	-	359,0	-	329,5
66	-	-	-	332,0	-	294,5
68	-	-	-	321,0	-	278,0
70	-	-	-	-	-	264,0
74	-	-	-	-	254,0	236,0
78	-	-	-	-	238,0	210,0
79	-	-	-	-	234,0	204,0
82	-	-	-	-	-	186,5
86	-	-	-	-	-	168,0
90	-	-	-	-	-	152,0
94	-	-	-	-	-	133,5
96	-	-	-	-	-	124,0

72 m + 60 m

	SWSL					SFSL
	0 t	0 t - 800 t				
	85°	85°	75°	65°	55°	15°
m	t	t	t	t	t	t
26	-	438,0*	-	-	-	-
28	-	434,0*	-	-	-	-
30	-	425,0*	-	-	-	-
32	162,0	464,0	-	-	-	455,0
34	151,0	464,0	-	-	-	454,0
38	133,0	452,0	-	-	-	448,0
42	118,0	400,0	-	-	-	444,5
46	105,0	348,0	-	-	-	431,5
50	94,0	306,0	-	-	-	413,0
54	82,5	272,0	394,0	-	-	389,5
58	72,0	244,0	353,0	-	-	364,0
62	63,5	214,0	311,0	-	-	338,0
66	56,0	182,0	276,0	-	-	310,0
70	-	-	248,0	-	-	283,0
74	-	-	224,0	267,0	-	257,0
78	-	-	199,0	256,0	-	232,0
82	-	-	-	240,0	-	209,5
86	-	-	-	224,0	-	189,5
90	-	-	-	204,0	-	171,0
93	-	-	-	-	173,0	157,7
94	-	-	-	-	171,0	153,5
98	-	-	-	-	161,0	137,0
102	-	-	-	-	153,0	122,0
106	-	-	-	-	-	112,5
110	-	-	-	-	-	101,2
114	-	-	-	-	-	88,0
118	-	-	-	-	-	74,7
120	-	-	-	-	-	68,0

72 m + 48 m

m	t	t	t	t	t	t
22	-	540,0*	-	-	-	-
24	-	533,0*	-	-	-	-
26	-	519,0*	-	-	-	-
28	201,0	571,0	-	-	-	562,0
30	187,0	571,0	-	-	-	560,0
34	163,0	535,0	-	-	-	547,0
38	143,0	449,0	-	-	-	540,0
42	127,0	385,0	-	-	-	518,5
46	111,0	335,0	-	-	-	491,0
48	104,0	314,0	465,0	-	-	477,0
50	97,5	296,0	457,0	-	-	453,0
54	86,0	255,0	391,0	-	-	407,5
58	-	-	340,0	-	-	368,0
62	-	-	300,0	-	-	335,0
66	-	-	267,0	-	-	304,0
67	-	-	259,5	316,0	-	296,0
68	-	-	252,0	311,0	-	288,0
70	-	-	-	300,0	-	273,5
74	-	-	-	279,0	-	245,5
78	-	-	-	262,0	-	221,0
80	-	-	-	253,0	-	210,0
82	-	-	-	-	-	199,0
83	-	-	-	-	209,0	193,5
86	-	-	-	-	200,0	178,0
90	-	-	-	-	188,0	158,5
94	-	-	-	-	-	142,0
98	-	-	-	-	-	129,5
102	-	-	-	-	-	115,5
106	-	-	-	-	-	99,7
108	-	-	-	-	-	91,5
110	-	-	-	-	-	-

72 m + 72 m

m	t	t	t	t	t	t
30	-	358,0*	-	-	-	-
34	-	349,0*	-	-	-	-
38	123,0	378,0	-	-	-	370,0
42	108,0	372,0	-	-	-	365,0
46	96,0	354,0	-	-	-	363,5
50	85,5	311,0	-	-	-	359,5
54	76,5	276,0	-	-	-	349,5
58	68,5	246,0	-	-	-	332,0
60	64,0	234,0	334,0	-	-	322,0
62	60,0	222,0	315,0	-	-	311,5
66	52,0	200,0	280,0	-	-	292,0
70	45,5	177,0	250,0	-	-	275,0
74	39,5	155,0	225,0	-	-	259,5
78	35,0	132,0	203,0	-	-	240,0
82	-	-	185,0	231,0	-	217,5
86	-	-	168,0	220,0	-	197,5
90	-	-	146,0	203,0	-	179,0
94	-	-	-	185,0	-	163,0
98	-	-	-	169,0	-	147,5
102	-	-	-	155,0	146,0	132,0
106	-	-	-	-	138,0	118,5
110	-	-	-	-	130,0	105,5
113	-	-	-	-	126,0	98,8
114	-	-	-	-	-	96,7
118	-	-	-	-	-	87,2
122	-	-	-	-	-	76,2
126	-	-	-	-	-	65,0
130	-	-	-	-	-	53,7
132	-	-	-	-	-	48,0

For explanations see page 26 · Bemerkungen siehe Seite 26 · Pour plus de détails, voir page 26 · Per spiegazioni vedere a pagina 26 · Véase p. 26 para más información · Para explicações, ver página 26 · Объяснения см. на стр. 26

SWSL/SFSL

295 t + 60 t ZB | 19-30 m | 10,50 m | 9.8 m/s | 360° | ISO

72 m + 84 m

	SWSL					SFSL
	0 t	0 t - 800 t				
	85°	85°	75°	65°	55°	15°
m	t	t	t	t	t	t
34	-	290,0*	-	-	-	-
38	-	284,0*	-	-	-	-
42	99,0	299,0	-	-	-	-
44	93,0	298,0	-	-	-	292,0
46	87,0	296,0	-	-	-	291,0
50	77,0	291,0	-	-	-	289,5
54	68,0	276,0	-	-	-	288,5
58	60,5	247,0	-	-	-	283,0
62	53,5	222,0	-	-	-	276,5
66	47,5	200,0	280,0	-	-	266,0
70	42,0	182,0	250,0	-	-	250,5
74	36,5	166,0	225,0	-	-	235,5
78	31,5	150,0	203,0	-	-	221,5
82	27,0	133,0	184,0	-	-	210,0
86	23,0	117,0	168,0	-	-	199,5
88	21,0	109,0	160,0	-	-	194,0
90	-	-	153,0	192,0	-	186,5
94	-	-	141,0	184,0	-	170,5
98	-	-	128,0	168,0	-	154,5
102	-	-	112,0	153,0	-	140,0
106	-	-	-	141,0	-	127,0
110	-	-	-	130,0	-	114,5
111	-	-	-	127,0	123,0	111,2
114	-	-	-	120,0	118,0	102,2
118	-	-	-	-	112,0	90,7
122	-	-	-	-	106,0	83,2
124	-	-	-	-	103,0	79,5
126	-	-	-	-	-	75,0
130	-	-	-	-	-	65,5
134	-	-	-	-	-	55,7
138	-	-	-	-	-	46,0
142	-	-	-	-	-	36,0
144	-	-	-	-	-	31,0

72 m + 96 m

	SWSL					SFSL
	0 t	0 t - 800 t				
	85°	85°	75°	65°	55°	15°
m	t	t	t	t	t	t
36	-	231,0*	-	-	-	-
38	-	231,0*	-	-	-	-
42	-	226,0*	-	-	-	-
46	79,5	235,0	-	-	-	-
48	74,5	234,0	-	-	-	229,0
50	70,0	231,0	-	-	-	227,5
54	61,5	226,0	-	-	-	225,0
58	54,0	220,0	-	-	-	223,0
62	47,5	213,0	-	-	-	219,5
66	41,5	199,0	-	-	-	214,5
70	36,0	181,0	-	-	-	209,5
72	33,5	172,0	214,0	-	-	207,0
74	31,5	164,0	214,0	-	-	203,5
78	27,0	150,0	202,0	-	-	196,0
82	23,0	138,0	183,0	-	-	188,5
84	21,0	132,0	174,0	-	-	185,0
86	-	126,0	166,0	-	-	180,5
90	-	113,5	152,0	-	-	171,0
94	-	101,0	139,0	-	-	162,5
98	-	88,7	128,0	166,0	-	154,5
100	-	82,5	122,0	159,0	-	150,0
102	-	-	117,0	152,0	-	144,5
106	-	-	108,0	139,0	-	132,5
110	-	-	98,0	128,0	-	120,0
112	-	-	92,0	122,0	-	114,0
114	-	-	-	117,0	-	109,0
118	-	-	-	108,0	-	98,2
120	-	-	-	104,0	104,0	92,5
122	-	-	-	100,0	101,0	87,5
124	-	-	-	96,5	98,0	82,5
126	-	-	-	-	95,5	77,5
130	-	-	-	-	90,5	70,7
134	-	-	-	-	85,5	63,7
136	-	-	-	-	83,5	60,0
138	-	-	-	-	-	55,7
142	-	-	-	-	-	47,0
146	-	-	-	-	-	38,2
150	-	-	-	-	-	30,0
152	-	-	-	-	-	26,0

* Main boom angle 88° · Hauptauslegerwinkel 88° · Jarret de flèche principale 88° · Inclinazione braccio base 88° · Ângulo de pluma principal 88° · Ângulo da lança principal 88° · Угол подъема гл. стрелы 88°

Main boom angle 88°, 85°, 75°, 65° and 55°, capacities for intermediate boom positions are calculated by the crane control system IC-1
Hauptauslegerwinkel 88°, 85°, 75°, 65° und 55°, Traglasten für Zwischenstellungen des Hauptauslegers werden von der Kransteuerung IC-1 berechnet
Jarret de flèche principale 88°, 85°, 75°, 65° et 55°, le système de commande de la grue IC-1 calcule les charges pour les positions intermédiaires de la flèche
Inclinazione braccio base 88°, 85°, 75°, 65° e 55°, capacità per posizioni intermedie del braccio sono calcolate dal sistema di controllo della gru IC-1
Ángulo de pluma principal 88°, 85°, 75°, 65° y 55° las capacidades para posiciones de pluma intermedias son calculadas por el sistema de control de grúa IC-1
Ângulos da lança principal 88°, 85°, 75°, 65° e 55°; as capacidades para posições da lança intermediária são calculadas pelo sistema de controle da grua IC-1
Грузоподъемность при углах подъема главной стрелы 88°, 85°, 75°, 65° и 55°, грузоподъемность в промежуточных положениях стрелы расчитывается системой управления краном IC-1

SWSL/SFSL

295 t + 60 t ZB | 19-30 m | 10,50 m | 9.8 m/s | 360° | ISO

72 m + 108 m

	SWSL					SFSL
	0 t	0 t - 800 t				
	85°	85°	75°	65°	55°	15°
m	t	t	t	t	t	t
40	-	179,0*	-	-	-	-
42	-	179,0*	-	-	-	-
46	-	174,0*	-	-	-	-
50	62,5	178,0	-	-	-	-
52	58,5	178,0	-	-	-	174,0
54	54,5	176,0	-	-	-	173,0
58	47,5	172,0	-	-	-	170,5
62	41,0	167,0	-	-	-	167,5
66	35,0	163,0	-	-	-	165,0
70	30,0	158,0	-	-	-	161,5
74	25,5	153,0	-	-	-	157,0
78	21,0	149,0	159,0	-	-	153,0
82	-	136,0	159,0	-	-	149,5
86	-	124,5	157,0	-	-	145,5
90	-	114,5	150,0	-	-	141,5
94	-	105,5	138,0	-	-	138,0
98	-	96,0	126,0	-	-	134,5
102	-	86,0	116,0	-	-	131,0
106	-	76,2	106,0	129,0	-	126,0
110	-	66,5	98,0	126,0	-	120,0
112	-	61,5	94,0	120,0	-	117,0
114	-	-	90,5	115,0	-	113,0
118	-	-	83,5	106,0	-	103,2
122	-	-	74,7	98,0	-	93,2
124	-	-	70,0	94,0	-	89,0
126	-	-	-	90,5	-	84,0
130	-	-	-	83,5	85,5	74,5
134	-	-	-	77,0	80,5	65,5
136	-	-	-	74,0	78,5	62,5
138	-	-	-	-	76,0	59,5
142	-	-	-	-	72,0	53,2
146	-	-	-	-	68,0	46,0
148	-	-	-	-	66,0	42,0
150	-	-	-	-	-	38,2
154	-	-	-	-	-	30,7
156	-	-	-	-	-	27,0
160	-	-	-	-	-	-

72 m + 120 m

	SWSL					SFSL
	0 t	0 t - 800 t				
	85°	85°	75°	65°	55°	15°
m	t	t	t	t	t	t
44	-	132,0*	-	-	-	-
46	-	132,0*	-	-	-	-
50	-	129,0*	-	-	-	-
54	47,5	130,0	-	-	-	-
56	44,0	130,0	-	-	-	130,0
58	40,5	128,0	-	-	-	129,0
62	34,5	126,0	-	-	-	126,5
66	29,0	122,0	-	-	-	124,5
70	24,0	119,0	-	-	-	122,5
72	21,5	117,0	-	-	-	121,0
74	-	114,0	-	-	-	119,0
78	-	108,0	-	-	-	116,0
82	-	102,2	-	-	-	113,5
84	-	99,5	112,0	-	-	112,0
86	-	96,5	112,0	-	-	110,0
90	-	90,7	109,0	-	-	106,0
94	-	85,0	104,0	-	-	102,0
98	-	79,7	98,5	-	-	98,2
102	-	75,0	93,0	-	-	95,2
106	-	70,0	87,0	-	-	92,0
110	-	65,0	81,5	-	-	88,5
114	-	60,0	75,5	84,5	-	85,2
118	-	54,0	70,5	84,0	-	81,7
122	-	46,5	66,0	80,0	-	78,5
124	-	42,5	63,5	77,5	-	77,0
126	-	-	61,5	75,0	-	75,5
130	-	-	57,0	70,0	-	72,2
134	-	-	52,5	65,5	-	67,5
136	-	-	50,0	63,0	-	64,5
138	-	-	-	61,0	66,0	60,2
142	-	-	-	57,0	65,0	52,5
146	-	-	-	53,0	61,0	47,5
148	-	-	-	51,0	59,5	45,0
150	-	-	-	-	57,5	42,0
154	-	-	-	-	55,0	35,2
158	-	-	-	-	51,5	28,2
160	-	-	-	-	-	25,0

* Main boom angle 88° · Hauptauslegerwinkel 88° · Jarret de flèche principale 88° · Inclinazione braccio base 88° · Ángulo de pluma principal 88° · Ângulo da lança principal 88° · Угол подъема гл. стрелы 88°

Main boom angle 88°, 85°, 75°, 65° and 55°, capacities for intermediate boom positions are calculated by the crane control system IC-1
Hauptauslegerwinkel 88°, 85°, 75°, 65° und 55°, Traglasten für Zwischenstellungen des Hauptauslegers werden von der Kransteuerung IC-1 berechnet
Jarret de flèche principale 88°, 85°, 75°, 65° et 55°, le système de commande de la grue IC-1 calcule les charges pour les positions intermédiaires de la flèche
Inclinazione braccio base 88°, 85°, 75°, 65° e 55°, capacità per posizioni intermedie del braccio sono calcolate dal sistema di controllo della gru IC-1
Ángulo de pluma principal 88°, 85°, 75°, 65° y 55° las capacidades para posiciones de pluma intermedias son calculadas por el sistema de control de grúa IC-1
Ângulos da lança principal 88°, 85°, 75°, 65° e 55°; as capacidades para posições da lança intermediária são calculadas pelo sistema de controle da grua IC-1
Грузоподъемность при углах подъема главной стрелы 88°, 85°, 75°, 65° и 55°, грузоподъемность в промежуточных положениях стрелы расчитывается системой управления краном IC-1

295 t + 60 t ZB | 19-30 m | 10,50 m | 9.8 m/s | 360° | ISO

78 m + 36 m

	SWSL					SFSL
	0 t	0 t - 800 t				
	85°	85°	75°	65°	55°	15°
m	t	t	t	t	t	t
20	-	611,0*	-	-	-	-
22	-	593,0*	-	-	-	-
24	-	574,0*	-	-	-	-
26	224,0	649,0	-	-	-	636,0
28	207,0	636,0	-	-	-	628,0
30	193,0	620,0	-	-	-	625,0
34	169,0	511,0	-	-	-	619,0
38	150,0	428,0	-	-	-	588,0
42	132,0	367,0	-	-	-	548,5
44	123,0	342,0	532,0	-	-	526,0
46	-	-	529,0	-	-	497,0
50	-	-	456,0	-	-	444,0
54	-	-	388,0	-	-	399,0
58	-	-	336,0	-	-	361,0
62	-	-	-	354,0	-	328,5
66	-	-	-	328,0	-	297,0
70	-	-	-	305,0	-	266,5
71	-	-	-	300,0	-	259,2
74	-	-	-	-	-	239,5
78	-	-	-	-	234,0	215,0
82	-	-	-	-	219,0	191,5
86	-	-	-	-	-	170,0
90	-	-	-	-	-	150,0
94	-	-	-	-	-	137,0
98	-	-	-	-	-	122,0
100	-	-	-	-	-	113,0

78 m + 48 m

m	t	t	t	t	t	t
22	-	495,0*	-	-	-	-
24	-	495,0*	-	-	-	-
26	-	482,0*	-	-	-	-
28	-	470,0*	-	-	-	-
30	178,0	526,0	-	-	-	516,0
34	156,0	512,0	-	-	-	510,0
38	137,0	457,0	-	-	-	508,0
42	122,0	391,0	-	-	-	489,0
46	109,0	340,0	-	-	-	467,5
50	95,5	299,0	448,0	-	-	441,0
54	83,5	255,0	414,0	-	-	403,5
56	78,5	229,0	384,0	-	-	382,0
58	-	-	357,0	-	-	364,0
62	-	-	313,0	-	-	330,0
66	-	-	278,0	-	-	300,5
68	-	-	263,0	-	-	287,0
69	-	-	-	301,0	-	280,2
70	-	-	-	295,0	-	273,5
74	-	-	-	275,0	-	247,5
78	-	-	-	257,0	-	223,0
82	-	-	-	242,0	-	201,0
86	-	-	-	-	-	181,5
87	-	-	-	-	192,0	176,7
90	-	-	-	-	184,0	162,0
94	-	-	-	-	174,0	143,5
98	-	-	-	-	-	127,0
102	-	-	-	-	-	115,0
106	-	-	-	-	-	103,5
110	-	-	-	-	-	90,0
112	-	-	-	-	-	83,0

78 m + 60 m

	SWSL					SFSL
	0 t	0 t - 800 t				
	85°	85°	75°	65°	55°	15°
m	t	t	t	t	t	t
26	-	409,0*	-	-	-	-
28	-	405,0*	-	-	-	-
30	-	397,0*	-	-	-	-
34	144,0	432,0	-	-	-	423,0
38	127,0	424,0	-	-	-	417,0
42	112,0	407,0	-	-	-	415,5
46	100,0	353,0	-	-	-	410,5
50	89,5	310,0	-	-	-	393,5
54	80,0	275,0	-	-	-	380,5
56	74,5	261,0	375,0	-	-	374,0
58	69,5	246,0	371,0	-	-	363,0
62	61,0	213,0	325,0	-	-	336,0
66	53,5	181,0	288,0	-	-	306,0
70	-	-	257,0	-	-	279,5
74	-	-	232,0	-	-	255,0
77	-	-	213,0	253,0	-	237,5
78	-	-	206,0	252,0	-	232,0
80	-	-	191,0	243,0	-	221,0
82	-	-	-	236,0	-	210,0
86	-	-	-	221,0	-	189,5
90	-	-	-	209,0	-	172,0
94	-	-	-	194,0	-	156,0
96	-	-	-	-	162,0	148,0
98	-	-	-	-	157,0	139,5
102	-	-	-	-	149,0	124,0
105	-	-	-	-	143,0	113,5
106	-	-	-	-	-	110,0
110	-	-	-	-	-	98,5
114	-	-	-	-	-	89,5
118	-	-	-	-	-	78,7
122	-	-	-	-	-	66,5
124	-	-	-	-	-	60,5
126	-	-	-	-	-	-

* Main boom angle 88° · Hauptauslegerwinkel 88° · Jarret de flèche principale 88° · Inclinazione braccio base 88° · Ángulo de pluma principal 88° · Ângulo da lança principal 88° · Угол подъема гл. стрелы 88°

Main boom angle 88°, 85°, 75°, 65° and 55°, capacities for intermediate boom positions are calculated by the crane control system IC-1

Hauptauslegerwinkel 88°, 85°, 75°, 65° und 55°, Traglasten für Zwischenstellungen des Hauptauslegers werden von der Kransteuerung IC-1 berechnet

Jarret de flèche principale 88°, 85°, 75°, 65° et 55°, le système de commande de la grue IC-1 calcule les charges pour les positions intermédiaires de la flèche

Inclinazione braccio base 88°, 85°, 75°, 65° e 55°, capacità per posizioni intermedie del braccio sono calcolate dal sistema di controllo della gru IC-1

Ángulo de pluma principal 88°, 85°, 75°, 65° y 55° las capacidades para posiciones de pluma intermedias son calculadas por el sistema de control de grúa IC-1

Ângulos da lança principal 88°, 85°, 75°, 65° e 55°; as capacidades para posições da lança intermediária são calculadas pelo sistema de controle da grua IC-1

Грузоподъемность при углах подъема главной стрелы 88°, 85°, 75°, 65° и 55°, грузоподъемность в промежуточных положениях стрелы расчитывается системой управления краном IC-1

SWSL/SFSL

295 t + 60 t ZB | 19-30 m | 10,50 m | 9.8 m/s | 360° | ISO

78 m + 72 m

	SWSL					SFSL
	0 t	0 t - 800 t				
	85°	85°	75°	65°	55°	15°
m	t	t	t	t	t	t
30	-	336,0*	-	-	-	-
34	-	327,0*	-	-	-	-
38	116,0	353,0	-	-	-	346,0
42	103,0	350,0	-	-	-	343,5
46	91,0	341,0	-	-	-	341,5
50	81,0	320,0	-	-	-	340,0
54	72,0	284,0	-	-	-	332,0
58	64,5	253,0	-	-	-	318,5
62	57,5	226,0	317,0	-	-	309,0
66	50,0	200,0	296,0	-	-	296,5
70	43,5	176,0	264,0	-	-	280,0
74	37,5	153,0	237,0	-	-	260,0
78	33,0	131,0	214,0	-	-	238,5
82	-	-	194,0	-	-	217,5
86	-	-	172,0	216,0	-	198,0
90	-	-	151,0	203,0	-	180,0
92	-	-	140,0	197,0	-	171,0
94	-	-	-	191,0	-	162,5
98	-	-	-	180,0	-	147,5
102	-	-	-	165,0	-	134,0
104	-	-	-	155,0	-	127,0
105	-	-	-	-	136,0	123,5
106	-	-	-	-	134,0	120,0
110	-	-	-	-	127,0	107,0
114	-	-	-	-	120,0	94,7
117	-	-	-	-	116,0	85,7
118	-	-	-	-	-	84,0
122	-	-	-	-	-	76,5
126	-	-	-	-	-	67,2
130	-	-	-	-	-	57,0
134	-	-	-	-	-	46,7
136	-	-	-	-	-	41,5
140	-	-	-	-	-	-

* Main boom angle 88° · Hauptauslegerwinkel 88° · Jarret de flèche principale 88° · Inclinazione braccio base 88° · Ángulo de pluma principal 88° · Ângulo da lança principal 88° · Угол подъема гл. стрелы 88°

78 m + 84 m

	SWSL					SFSL
	0 t	0 t - 800 t				
	85°	85°	75°	65°	55°	15°
m	t	t	t	t	t	t
34	-	274,0*	-	-	-	-
38	-	269,0*	-	-	-	-
42	93,5	284,0	-	-	-	-
44	87,5	284,0	-	-	-	277,0
46	82,0	282,0	-	-	-	276,5
50	72,5	277,0	-	-	-	275,5
54	64,0	272,0	-	-	-	274,0
58	56,5	254,0	-	-	-	270,5
62	50,0	228,0	-	-	-	265,0
66	44,0	206,0	-	-	-	260,0
68	41,5	196,0	263,0	-	-	258,0
70	38,5	187,0	263,0	-	-	253,0
74	34,0	167,0	237,0	-	-	241,5
78	29,5	149,0	214,0	-	-	228,5
82	25,2	132,0	194,0	-	-	216,5
84	23,0	124,0	185,0	-	-	211,0
86	-	115,5	176,0	-	-	203,5
88	-	107,0	168,0	-	-	196,0
90	-	-	161,0	-	-	187,0
92	-	-	154,0	183,0	-	178,0
94	-	-	147,0	183,0	-	170,0
98	-	-	131,0	176,0	-	154,5
102	-	-	115,0	165,0	-	140,0
104	-	-	107,0	157,0	-	133,0
106	-	-	-	151,0	-	127,5
110	-	-	-	139,0	-	115,5
114	-	-	-	127,0	115,0	103,0
116	-	-	-	119,0	111,0	97,0
118	-	-	-	-	108,0	91,7
122	-	-	-	-	103,0	81,2
126	-	-	-	-	97,5	71,2
128	-	-	-	-	95,0	68,0
130	-	-	-	-	-	64,7
134	-	-	-	-	-	57,0
138	-	-	-	-	-	48,0
142	-	-	-	-	-	39,2
146	-	-	-	-	-	30,2
148	-	-	-	-	-	25,5

Main boom angle 88°, 85°, 75°, 65° and 55°, capacities for intermediate boom positions are calculated by the crane control system IC-1
Hauptauslegerwinkel 88°, 85°, 75°, 65° und 55°, Traglasten für Zwischenstellungen des Hauptauslegers werden von der Kransteuerung IC-1 berechnet
Jarret de flèche principale 88°, 85°, 75°, 65° et 55°, le système de commande de la grue IC-1 calcule les charges pour les positions intermédiaires de la flèche
Inclinazione braccio base 88°, 85°, 75°, 65° e 55°, capacità per posizioni intermedie del braccio sono calcolate dal sistema di controllo della gru IC-1
Ángulo de pluma principal 88°, 85°, 75°, 65° y 55° las capacidades para posiciones de pluma intermedias son calculadas por el sistema de control de grúa IC-1
Ângulos da lança principal 88°, 85°, 75°, 65° e 55°; as capacidades para posições da lança intermediária são calculadas pelo sistema de controle da grua IC-1
Грузоподъемность при углах подъема главной стрелы 88°, 85°, 75°, 65° и 55°, грузоподъемность в промежуточных положениях стрелы расчитывается системой управления краном IC-1

295 t + 60 t ZB | 19-30 m | 10,50 m | 9.8 m/s | 360° | ISO

78 m + 96 m

	SWSL					SFSL
	0 t	0 t - 800 t				
	85°	85°	75°	65°	55°	15°
m	t	t	t	t	t	t
36	-	219,0*	-	-	-	-
38	-	219,0*	-	-	-	-
42	-	215,0*	-	-	-	-
46	74,5	224,0	-	-	-	-
48	70,0	224,0	-	-	-	219,0
50	65,5	222,0	-	-	-	218,0
54	57,0	218,0	-	-	-	216,0
58	50,0	212,0	-	-	-	214,0
62	43,5	206,0	-	-	-	211,5
66	38,0	200,0	-	-	-	207,5
70	33,0	186,0	-	-	-	203,0
74	28,0	169,0	208,0	-	-	199,5
78	24,0	154,0	207,0	-	-	193,5
80	22,0	147,0	202,0	-	-	189,0
82	-	139,5	193,0	-	-	185,0
86	-	125,5	175,0	-	-	177,5
90	-	112,5	160,0	-	-	170,5
94	-	99,7	146,0	-	-	163,5
98	-	87,2	134,0	-	-	156,5
100	-	81,0	128,0	159,0	-	153,0
102	-	-	123,0	159,0	-	146,0
106	-	-	112,0	149,0	-	133,0
110	-	-	100,0	137,0	-	120,5
114	-	-	88,0	126,0	-	108,5
118	-	-	-	116,0	-	98,2
122	-	-	-	107,0	-	88,5
124	-	-	-	103,0	95,0	83,5
126	-	-	-	98,0	92,0	78,5
128	-	-	-	92,0	89,5	73,5
130	-	-	-	-	87,0	68,7
134	-	-	-	-	82,5	59,7
138	-	-	-	-	78,0	54,0
140	-	-	-	-	76,0	51,0
142	-	-	-	-	-	47,5
146	-	-	-	-	-	40,0
150	-	-	-	-	-	31,7
154	-	-	-	-	-	23,7
156	-	-	-	-	-	20,0
158	-	-	-	-	-	-

78 m + 108 m

	SWSL					SFSL
	0 t	0 t - 800 t				
	85°	85°	75°	65°	55°	15°
m	t	t	t	t	t	t
40	-	172,0*	-	-	-	-
42	-	172,0*	-	-	-	-
46	-	167,0*	-	-	-	-
50	58,0	172,0	-	-	-	-
52	54,0	172,0	-	-	-	168,0
54	50,0	170,0	-	-	-	166,5
58	43,5	166,0	-	-	-	164,0
62	37,0	162,0	-	-	-	162,0
66	31,5	158,0	-	-	-	159,5
70	27,0	153,0	-	-	-	156,0
74	22,5	149,0	-	-	-	152,5
76	20,0	147,0	-	-	-	151,0
78	-	145,0	-	-	-	149,5
80	-	143,0	154,0	-	-	148,0
82	-	138,5	154,0	-	-	145,5
86	-	128,5	153,0	-	-	141,0
90	-	117,0	150,0	-	-	137,0
94	-	105,5	145,0	-	-	133,5
98	-	95,0	132,0	-	-	130,0
102	-	85,0	121,0	-	-	126,5
106	-	75,0	112,0	-	-	123,0
108	-	70,0	107,0	124,0	-	121,0
110	-	65,0	103,0	124,0	-	119,5
112	-	60,0	99,0	124,0	-	118,0
114	-	-	95,0	124,0	-	113,0
118	-	-	85,5	114,0	-	103,0
122	-	-	76,2	105,0	-	93,0
126	-	-	66,5	97,0	-	83,7
130	-	-	-	89,5	-	75,0
134	-	-	-	82,5	77,5	66,0
138	-	-	-	75,0	73,0	57,2
142	-	-	-	-	69,0	49,5
146	-	-	-	-	65,0	44,7
150	-	-	-	-	61,5	39,0
154	-	-	-	-	-	31,7
158	-	-	-	-	-	24,5
160	-	-	-	-	-	21,0
162	-	-	-	-	-	-
166	-	-	-	-	-	-

* Main boom angle 88° · Hauptauslegerwinkel 88° · Jarret de flèche principale 88° · Inclinazione braccio base 88° · Ángulo de pluma principal 88° · Ângulo da lança principal 88° · Угол подъема гл. стрелы 88°

Main boom angle 88°, 85°, 75°, 65° and 55°, capacities for intermediate boom positions are calculated by the crane control system IC-1
Hauptauslegerwinkel 88°, 85°, 75°, 65° und 55°, Traglasten für Zwischenstellungen des Hauptauslegers werden von der Kransteuerung IC-1 berechnet
Jarret de flèche principale 88°, 85°, 75°, 65° et 55°, le système de commande de la grue IC-1 calcule les charges pour les positions intermédiaires de la flèche
Inclinazione braccio base 88°, 85°, 75°, 65° e 55°, capacità per posizioni intermedie del braccio sono calcolate dal sistema di controllo della gru IC-1
Ángulo de pluma principal 88°, 85°, 75°, 65° y 55° las capacidades para posiciones de pluma intermedias son calculadas por el sistema de control de grúa IC-1
Ângulos da lança principal 88°, 85°, 75°, 65° e 55°; as capacidades para posições da lança intermediária são calculadas pelo sistema de controle da grua IC-1
Грузоподъемность при углах подъема главной стрелы 88°, 85°, 75°, 65° и 55°, грузоподъемность в промежуточных положениях стрелы расчитывается системой управления краном IC-1

295 t + 60 t ZB | 19-30 m | 10,50 m | 9.8 m/s | 360° | ISO

78 m + 120 m

	SWSL					SFSL
	0 t	0 t - 800 t				
	85°	85°	75°	65°	55°	15°
m	t	t	t	t	t	t
44	-	127,0*	-	-	-	-
46	-	127,0*	-	-	-	-
50	-	124,0*	-	-	-	-
54	43,5	126,0	-	-	-	-
56	40,0	126,0	-	-	-	125,0
58	36,5	125,0	-	-	-	124,0
62	31,0	122,0	-	-	-	122,5
66	25,5	119,0	-	-	-	120,5
70	20,5	116,0	-	-	-	118,0
74	-	112,0	-	-	-	116,0
78	-	106,0	-	-	-	113,5
82	-	101,0	-	-	-	110,0
86	-	95,2	108,0	-	-	107,0
90	-	89,7	108,0	-	-	104,0
94	-	84,5	104,0	-	-	100,5
98	-	79,5	99,0	-	-	97,2
102	-	74,5	93,5	-	-	93,5
106	-	69,7	88,5	-	-	90,5
110	-	65,0	83,0	-	-	88,0
114	-	59,7	77,5	-	-	85,0
116	-	57,0	75,0	83,0	-	83,5
118	-	53,0	72,0	83,0	-	81,7
122	-	45,0	67,5	81,5	-	78,5
124	-	41,0	65,0	79,5	-	77,0
126	-	-	63,0	77,5	-	75,5
130	-	-	58,5	72,5	-	72,7
134	-	-	54,0	68,0	-	68,0
138	-	-	47,0	63,5	-	60,5
142	-	-	-	59,5	62,0	52,5
146	-	-	-	55,5	58,0	44,7
150	-	-	-	51,5	54,5	39,0
154	-	-	-	-	51,0	34,0
158	-	-	-	-	48,0	28,2
160	-	-	-	-	46,5	25,0
162	-	-	-	-	-	-

84 m + 36 m

	SWSL					SFSL
	0 t	0 t - 800 t				
	85°	85°	75°	65°	55°	15°
m	t	t	t	t	t	t
20	-	562,0*	-	-	-	-
22	-	546,0*	-	-	-	-
24	-	529,0*	-	-	-	-
26	213,0	589,0	-	-	-	580,0
28	198,0	583,0	-	-	-	577,0
30	184,0	571,0	-	-	-	576,0
34	161,0	523,0	-	-	-	574,0
38	143,0	436,0	-	-	-	549,0
42	127,0	372,0	-	-	-	523,5
44	120,0	347,0	-	-	-	511,0
45	-	-	500,0	-	-	499,0
46	-	-	500,0	-	-	487,0
50	-	-	475,0	-	-	439,0
54	-	-	410,0	-	-	394,5
58	-	-	353,0	-	-	356,0
62	-	-	-	-	-	322,5
64	-	-	-	330,0	-	307,0
66	-	-	-	321,0	-	293,5
70	-	-	-	298,0	-	266,0
73	-	-	-	283,0	-	246,0
74	-	-	-	-	-	240,0
78	-	-	-	-	-	216,5
81	-	-	-	-	216,0	199,5
82	-	-	-	-	213,0	194,0
86	-	-	-	-	200,0	173,0
90	-	-	-	-	-	153,0
94	-	-	-	-	-	134,0
98	-	-	-	-	-	119,0
102	-	-	-	-	-	107,5
106	-	-	-	-	-	93,5
108	-	-	-	-	-	86,0

* Main boom angle 88° · Hauptauslegerwinkel 88° · Jarret de flèche principale 88° · Inclinazione braccio base 88° · Ángulo de pluma principal 88° · Ângulo da lança principal 88° · Угол подъема гл. стрелы 88°

Main boom angle 88°, 85°, 75°, 65° and 55°, capacities for intermediate boom positions are calculated by the crane control system IC-1
Hauptauslegerwinkel 88°, 85°, 75°, 65° und 55°, Traglasten für Zwischenstellungen des Hauptauslegers werden von der Kransteuerung IC-1 berechnet
Jarret de flèche principale 88°, 85°, 75°, 65° et 55°, le système de commande de la grue IC-1 calcule les charges pour les positions intermédiaires de la flèche
Inclinazione braccio base 88°, 85°, 75°, 65° e 55°, capacità per posizioni intermedie del braccio sono calcolate dal sistema di controllo della gru IC-1
Ángulo de pluma principal 88°, 85°, 75°, 65° y 55° las capacidades para posiciones de pluma intermedias son calculadas por el sistema de control de grúa IC-1
Ângulos da lança principal 88°, 85°, 75°, 65° e 55°; as capacidades para posições da lança intermediária são calculadas pelo sistema de controle da grua IC-1
Грузоподъемность при углах подъема главной стрелы 88°, 85°, 75°, 65° и 55°, грузоподъемность в промежуточных положениях стрелы расчитывается системой управления краном IC-1

295 t + 60 t ZB | 19-30 m | 10,50 m | 9.8 m/s | 360° | ISO

84 m + 48 m

	SWSL					SFSL
	0 t	0 t - 800 t				
	85°	85°	75°	65°	55°	15°
m	t	t	t	t	t	t
24	-	457,0*	-	-	-	-
26	-	445,0*	-	-	-	-
28	-	434,0*	-	-	-	-
30	170,0	483,0	-	-	-	474,0
34	148,0	471,0	-	-	-	469,0
38	130,0	454,0	-	-	-	467,0
42	116,0	398,0	-	-	-	460,0
46	103,0	345,0	-	-	-	438,0
50	92,5	303,0	-	-	-	421,0
52	86,5	285,0	421,0	-	-	413,0
54	80,5	262,0	421,0	-	-	395,0
56	75,5	237,0	406,0	-	-	377,0
58	-	-	377,0	-	-	359,0
62	-	-	328,0	-	-	325,5
66	-	-	290,0	-	-	296,0
70	-	-	259,0	-	-	270,0
72	-	-	-	278,0	-	258,0
74	-	-	-	268,0	-	246,0
78	-	-	-	251,0	-	222,5
82	-	-	-	235,0	-	200,5
84	-	-	-	228,0	-	190,0
86	-	-	-	-	-	180,5
90	-	-	-	-	177,0	162,0
94	-	-	-	-	167,0	145,0
97	-	-	-	-	160,0	133,0
98	-	-	-	-	-	129,0
102	-	-	-	-	-	113,5
106	-	-	-	-	-	99,0
110	-	-	-	-	-	90,5
114	-	-	-	-	-	79,7
118	-	-	-	-	-	67,0
120	-	-	-	-	-	60,5
122	-	-	-	-	-	-

84 m + 60 m

	SWSL					SFSL
	0 t	0 t - 800 t				
	85°	85°	75°	65°	55°	15°
m	t	t	t	t	t	t
26	-	379,0*	-	-	-	-
28	-	375,0*	-	-	-	-
30	-	367,0*	-	-	-	-
34	137,0	397,0	-	-	-	390,0
38	120,0	392,0	-	-	-	386,0
42	106,0	380,0	-	-	-	384,5
46	95,0	358,0	-	-	-	381,5
50	84,5	314,0	-	-	-	372,0
54	76,0	279,0	-	-	-	358,0
58	67,0	249,0	357,0	-	-	346,0
62	58,5	217,0	341,0	-	-	327,5
66	51,5	186,0	300,0	-	-	302,0
68	48,0	169,0	283,0	-	-	288,0
70	-	-	267,0	-	-	275,0
74	-	-	240,0	-	-	251,0
78	-	-	217,0	-	-	229,5
80	-	-	203,0	237,0	-	219,0
82	-	-	187,0	229,0	-	208,5
86	-	-	-	215,0	-	188,5
90	-	-	-	203,0	-	170,5
94	-	-	-	191,0	-	154,5
96	-	-	-	186,0	-	147,0
98	-	-	-	-	-	139,5
99	-	-	-	-	149,0	135,7
102	-	-	-	-	143,0	125,0
106	-	-	-	-	135,0	111,0
109	-	-	-	-	130,0	100,7
110	-	-	-	-	-	97,5
114	-	-	-	-	-	85,0
118	-	-	-	-	-	77,0
122	-	-	-	-	-	68,5
126	-	-	-	-	-	58,0
128	-	-	-	-	-	52,5

* Main boom angle 88° · Hauptauslegerwinkel 88° · Jarret de flèche principale 88° · Inclinazione braccio base 88° · Ángulo de pluma principal 88° · Ângulo da lança principal 88° · Угол подъема гл. стрелы 88°

Main boom angle 88°, 85°, 75°, 65° and 55°, capacities for intermediate boom positions are calculated by the crane control system IC-1
Hauptauslegerwinkel 88°, 85°, 75°, 65° und 55°, Traglasten für Zwischenstellungen des Hauptauslegers werden von der Kransteuerung IC-1 berechnet
Jarret de flèche principale 88°, 85°, 75°, 65° et 55°, le système de commande de la grue IC-1 calcule les charges pour les positions intermédiaires de la flèche
Inclinazione braccio base 88°, 85°, 75°, 65° e 55°, capacità per posizioni intermedie del braccio sono calcolate dal sistema di controllo della gru IC-1
Ángulo de pluma principal 88°, 85°, 75°, 65° y 55° las capacidades para posiciones de pluma intermedias son calculadas por el sistema de control de grúa IC-1
Ângulos da lança principal 88°, 85°, 75°, 65° e 55°; as capacidades para posições da lança intermediária são calculadas pelo sistema de controle da grua IC-1
Грузоподъемность при углах подъема главной стрелы 88°, 85°, 75°, 65° и 55°, грузоподъемность в промежуточных положениях стрелы расчитывается системой управления краном IC-1

295 t + 60 t ZB | 19-30 m | 10,50 m | 9.8 m/s | 360° | ISO

84 m + 72 m

	SWSL					SFSL
	0 t	0 t - 800 t				
	85°	85°	75°	65°	55°	15°
m	t	t	t	t	t	t
30	-	312,0*	-	-	-	-
34	-	304,0*	-	-	-	-
38	110,0	328,0	-	-	-	321,0
42	97,0	325,0	-	-	-	318,5
46	85,5	317,0	-	-	-	317,5
50	76,0	309,0	-	-	-	316,0
54	67,5	287,0	-	-	-	310,5
58	60,0	257,0	-	-	-	302,0
62	53,5	230,0	-	-	-	294,0
64	50,5	216,0	299,0	-	-	291,0
66	47,5	203,0	299,0	-	-	285,0
70	41,0	179,0	275,0	-	-	271,5
74	35,5	156,0	247,0	-	-	254,5
78	31,0	134,0	223,0	-	-	235,0
82	-	-	202,0	-	-	215,0
86	-	-	181,0	-	-	196,0
88	-	-	170,0	199,0	-	187,0
90	-	-	159,0	197,0	-	178,5
94	-	-	137,0	185,0	-	161,5
98	-	-	-	175,0	-	146,0
102	-	-	-	165,0	-	132,5
106	-	-	-	157,0	-	119,5
109	-	-	-	-	123,0	110,0
110	-	-	-	-	121,0	107,0
114	-	-	-	-	115,0	95,2
118	-	-	-	-	109,0	83,7
120	-	-	-	-	106,0	78,0
122	-	-	-	-	-	72,5
126	-	-	-	-	-	64,5
130	-	-	-	-	-	57,5
134	-	-	-	-	-	48,5
138	-	-	-	-	-	38,7
140	-	-	-	-	-	34,0

* Main boom angle 88° · Hauptauslegerwinkel 88° · Jarret de flèche principale 88° · Inclinazione braccio base 88° · Ángulo de pluma principal 88° · Ângulo da lança principal 88° · Угол подъема гл. стрелы 88°

84 m + 84 m

	SWSL					SFSL
	0 t	0 t - 800 t				
	85°	85°	75°	65°	55°	15°
m	t	t	t	t	t	t
34	-	256,0*	-	-	-	-
38	-	250,0*	-	-	-	-
42	87,5	267,0	-	-	-	-
44	82,0	267,0	-	-	-	260,0
46	77,0	265,0	-	-	-	259,5
50	67,5	261,0	-	-	-	258,5
54	59,5	256,0	-	-	-	257,5
58	52,5	249,0	-	-	-	255,0
62	46,0	233,0	-	-	-	250,0
66	40,5	210,0	-	-	-	244,0
70	35,0	190,0	248,0	-	-	238,5
74	30,5	169,0	246,0	-	-	229,5
78	26,5	151,0	224,0	-	-	219,0
82	22,7	134,0	203,0	-	-	208,5
84	21,0	126,0	193,0	-	-	203,0
86	-	118,0	185,0	-	-	198,0
88	-	110,0	176,0	-	-	193,0
90	-	-	169,0	-	-	184,5
94	-	-	153,0	-	-	168,0
96	-	-	145,0	172,0	-	160,0
98	-	-	137,0	171,0	-	153,0
102	-	-	121,0	161,0	-	139,0
104	-	-	113,0	156,0	-	132,0
106	-	-	-	152,0	-	125,5
110	-	-	-	144,0	-	113,5
114	-	-	-	136,0	-	102,5
118	-	-	-	121,0	103,0	91,7
122	-	-	-	-	98,0	81,2
126	-	-	-	-	92,5	71,0
130	-	-	-	-	87,5	61,0
132	-	-	-	-	85,5	56,5
134	-	-	-	-	-	53,5
138	-	-	-	-	-	47,2
142	-	-	-	-	-	39,7
146	-	-	-	-	-	31,5
148	-	-	-	-	-	27,5
150	-	-	-	-	-	-

Main boom angle 88°, 85°, 75°, 65° and 55°, capacities for intermediate boom positions are calculated by the crane control system IC-1
Hauptauslegerwinkel 88°, 85°, 75°, 65° und 55°, Traglasten für Zwischenstellungen des Hauptauslegers werden von der Kransteuerung IC-1 berechnet
Jarret de flèche principale 88°, 85°, 75°, 65° et 55°, le système de commande de la grue IC-1 calcule les charges pour les positions intermédiaires de la flèche
Inclinazione braccio base 88°, 85°, 75°, 65° e 55°, capacità per posizioni intermedie del braccio sono calcolate dal sistema di controllo della gru IC-1
Ángulo de pluma principal 88°, 85°, 75°, 65° y 55° las capacidades para posiciones de pluma intermedias son calculadas por el sistema de control de grúa IC-1
Ângulos da lança principal 88°, 85°, 75°, 65° e 55°; as capacidades para posições da lança intermediária são calculadas pelo sistema de controle da grua IC-1
Грузоподъемность при углах подъема главной стрелы 88°, 85°, 75°, 65° и 55°, грузоподъемность в промежуточных положениях стрелы расчитывается системой управления краном IC-1

295 t + 60 t ZB | 19-30 m | 10,50 m | 9.8 m/s | 360° | ISO

84 m + 96 m

	SWSL					SFSL
	0 t	0 t - 800 t				
	85°	85°	75°	65°	55°	15°
m	t	t	t	t	t	t
38	-	207,0*	-	-	-	-
42	-	203,0*	-	-	-	-
46	69,5	212,0	-	-	-	-
48	64,5	212,0	-	-	-	206,0
50	60,5	211,0	-	-	-	206,0
54	52,5	207,0	-	-	-	205,5
58	46,0	202,0	-	-	-	204,5
62	39,5	197,0	-	-	-	203,0
66	34,0	192,0	-	-	-	200,0
70	29,5	186,0	-	-	-	196,0
74	25,0	174,0	-	-	-	192,0
76	23,0	166,0	197,0	-	-	190,0
78	21,0	158,0	197,0	-	-	187,0
82	-	141,5	196,0	-	-	180,5
86	-	127,0	184,0	-	-	172,0
90	-	113,5	168,0	-	-	165,0
94	-	101,0	154,0	-	-	158,5
98	-	89,0	141,0	-	-	152,5
100	-	83,0	135,0	-	-	150,0
102	-	-	130,0	-	-	143,5
104	-	-	123,0	149,0	-	137,0
106	-	-	117,0	148,0	-	131,0
110	-	-	104,0	139,0	-	119,0
114	-	-	92,5	132,0	-	107,5
116	-	-	86,5	128,0	-	102,0
118	-	-	-	125,0	-	97,0
122	-	-	-	115,0	-	87,2
126	-	-	-	105,0	-	77,7
128	-	-	-	99,5	85,0	73,0
130	-	-	-	93,5	82,5	68,5
134	-	-	-	-	77,5	59,5
138	-	-	-	-	73,5	50,5
142	-	-	-	-	69,5	44,2
146	-	-	-	-	-	38,7
150	-	-	-	-	-	31,7
154	-	-	-	-	-	24,2
156	-	-	-	-	-	20,5

84 m + 108 m

	SWSL					SFSL
	0 t	0 t - 800 t				
	85°	85°	75°	65°	55°	15°
m	t	t	t	t	t	t
40	-	162,0*	-	-	-	-
42	-	162,0*	-	-	-	-
46	-	159,0*	-	-	-	-
50	53,0	163,0	-	-	-	-
52	49,5	163,0	-	-	-	159,0
54	46,0	162,0	-	-	-	158,5
58	39,0	159,0	-	-	-	157,0
62	33,5	155,0	-	-	-	155,0
66	28,0	151,0	-	-	-	153,0
70	23,5	147,0	-	-	-	150,5
72	21,0	145,0	-	-	-	149,0
74	-	143,0	-	-	-	147,5
78	-	139,0	-	-	-	144,0
82	-	135,0	148,0	-	-	141,0
86	-	129,0	148,0	-	-	137,0
90	-	119,0	146,0	-	-	132,5
94	-	107,5	144,0	-	-	128,5
98	-	96,7	140,0	-	-	125,0
102	-	86,5	129,0	-	-	121,0
106	-	76,5	118,0	-	-	117,5
110	-	66,5	109,0	117,0	-	114,0
112	-	61,5	104,0	117,0	-	112,0
114	-	-	99,0	117,0	-	109,0
118	-	-	89,5	115,0	-	101,0
122	-	-	80,0	113,0	-	91,2
126	-	-	70,5	105,0	-	82,0
128	-	-	65,5	101,0	-	77,5
130	-	-	-	97,0	-	73,2
134	-	-	-	90,0	-	64,7
136	-	-	-	85,5	70,5	60,5
138	-	-	-	81,0	68,5	56,5
142	-	-	-	71,5	64,5	48,5
146	-	-	-	-	60,5	40,7
150	-	-	-	-	57,0	34,7
154	-	-	-	-	53,5	29,7
158	-	-	-	-	-	24,0
160	-	-	-	-	-	20,5

* Main boom angle 88° · Hauptauslegerwinkel 88° · Jarret de flèche principale 88° · Inclinazione braccio base 88° · Ángulo de pluma principal 88° · Ângulo da lança principal 88° · Угол подъема гл. стрелы 88°

Main boom angle 88°, 85°, 75°, 65° and 55°, capacities for intermediate boom positions are calculated by the crane control system IC-1
Hauptauslegerwinkel 88°, 85°, 75°, 65° und 55°, Traglasten für Zwischenstellungen des Hauptauslegers werden von der Kransteuerung IC-1 berechnet
Jarret de flèche principale 88°, 85°, 75°, 65° et 55°, le système de commande de la grue IC-1 calcule les charges pour les positions intermédiaires de la flèche
Inclinazione braccio base 88°, 85°, 75°, 65° e 55°, capacità per posizioni intermedie del braccio sono calcolate dal sistema di controllo della gru IC-1
Ángulo de pluma principal 88°, 85°, 75°, 65° y 55° las capacidades para posiciones de pluma intermedias son calculadas por el sistema de control de grúa IC-1
Ângulos da lança principal 88°, 85°, 75°, 65° e 55°; as capacidades para posições da lança intermediária são calculadas pelo sistema de controle da grua IC-1
Грузоподъемность при углах подъема главной стрелы 88°, 85°, 75°, 65° и 55°, грузоподъемность в промежуточных положениях стрелы расчитывается системой управления краном IC-1

295 t + 60 t ZB | 19-30 m | 10,50 m | 9.8 m/s | 360° | ISO

84 m + 120 m

	SWSL					SFSL
	0 t	0 t - 800 t				
	85°	85°	75°	65°	55°	15°
m	t	t	t	t	t	t
44	-	122,0*	-	-	-	-
46	-	122,0*	-	-	-	-
50	-	119,0*	-	-	-	-
54	39,0	121,0	-	-	-	-
56	35,5	121,0	-	-	-	119,0
58	32,5	120,0	-	-	-	118,5
62	27,0	117,0	-	-	-	117,0
66	21,5	115,0	-	-	-	115,0
70	-	112,0	-	-	-	113,5
74	-	108,0	-	-	-	111,5
78	-	103,0	-	-	-	108,5
82	-	98,5	-	-	-	106,0
86	-	93,5	-	-	-	103,5
88	-	91,0	105,0	-	-	102,0
90	-	88,5	105,0	-	-	101,0
94	-	83,5	103,0	-	-	98,2
98	-	78,5	99,0	-	-	94,7
102	-	73,7	94,5	-	-	91,2
106	-	69,2	89,5	-	-	88,2
110	-	64,5	84,5	-	-	85,7
114	-	59,7	79,0	-	-	83,2
118	-	53,7	74,0	81,5	-	80,7
122	-	46,0	68,5	81,5	-	78,0
124	-	42,0	66,5	80,5	-	76,5
126	-	-	64,5	79,0	-	75,2
130	-	-	60,0	75,0	-	72,0
134	-	-	56,0	70,5	-	66,0
138	-	-	50,0	66,0	-	58,5
142	-	-	-	61,5	-	51,0
146	-	-	-	57,5	53,5	43,5
150	-	-	-	53,5	50,0	36,5
154	-	-	-	-	46,5	29,5
158	-	-	-	-	43,5	23,5
160	-	-	-	-	42,0	21,0
162	-	-	-	-	40,7	-
164	-	-	-	-	39,5	-
166	-	-	-	-	-	-

90 m + 36 m

	SWSL					SFSL
	0 t	0 t - 800 t				
	85°	85°	75°	65°	55°	15°
m	t	t	t	t	t	t
20	-	514,0*	-	-	-	-
22	-	499,0*	-	-	-	-
24	-	485,0*	-	-	-	-
26	204,0	536,0	-	-	-	527,0
28	189,0	531,0	-	-	-	525,0
30	176,0	520,0	-	-	-	524,0
34	154,0	498,0	-	-	-	521,0
38	137,0	445,0	-	-	-	515,0
42	122,0	379,0	-	-	-	487,5
44	115,0	352,0	-	-	-	478,0
46	-	-	-	-	-	468,5
47	-	-	467,0	-	-	463,7
50	-	-	461,0	-	-	435,5
54	-	-	430,0	-	-	391,0
58	-	-	372,0	-	-	352,0
60	-	-	346,0	-	-	334,0
62	-	-	-	-	-	318,5
66	-	-	-	-	-	289,5
67	-	-	-	307,0	-	282,7
70	-	-	-	291,0	-	264,0
74	-	-	-	272,0	-	239,0
76	-	-	-	263,0	-	226,0
78	-	-	-	-	-	215,5
82	-	-	-	-	-	194,5
84	-	-	-	-	200,0	184,0
86	-	-	-	-	194,0	174,0
89	-	-	-	-	185,0	159,5
90	-	-	-	-	-	155,0
94	-	-	-	-	-	137,5
98	-	-	-	-	-	121,0
102	-	-	-	-	-	105,2
106	-	-	-	-	-	95,2
110	-	-	-	-	-	84,0
112	-	-	-	-	-	77,0
114	-	-	-	-	-	-

* Main boom angle 88° · Hauptauslegerwinkel 88° · Jarret de flèche principale 88° · Inclinazione braccio base 88° · Ángulo de pluma principal 88° · Ângulo da lança principal 88° · Угол подъема гл. стрелы 88°

Main boom angle 88°, 85°, 75°, 65° and 55°, capacities for intermediate boom positions are calculated by the crane control system IC-1
Hauptauslegerwinkel 88°, 85°, 75°, 65° und 55°, Traglasten für Zwischenstellungen des Hauptauslegers werden von der Kransteuerung IC-1 berechnet
Jarret de flèche principale 88°, 85°, 75°, 65° et 55°, le système de commande de la grue IC-1 calcule les charges pour les positions intermédiaires de la flèche
Inclinazione braccio base 88°, 85°, 75°, 65° e 55°, capacità per posizioni intermedie del braccio sono calcolate dal sistema di controllo della gru IC-1
Ángulo de pluma principal 88°, 85°, 75°, 65° y 55° las capacidades para posiciones de pluma intermedias son calculadas por el sistema de control de grúa IC-1
Ângulos da lança principal 88°, 85°, 75°, 65° e 55°; as capacidades para posições da lança intermediária são calculadas pelo sistema de controle da grua IC-1
Грузоподъемность при углах подъема главной стрелы 88°, 85°, 75°, 65° и 55°, грузоподъемность в промежуточных положениях стрелы расчитывается системой управления краном IC-1

SWSL/SFSL

295 t + 60 t ZB | 19-30 m | 10,50 m | 9.8 m/s | 360° | ISO

90 m + 48 m

	SWSL					SFSL
	0 t	0 t - 800 t				
	85°	85°	75°	65°	55°	15°
m	t	t	t	t	t	t
24	-	418,0*	-	-	-	-
26	-	408,0*	-	-	-	-
28	-	397,0*	-	-	-	-
30	162,0	438,0	-	-	-	430,0
34	141,0	430,0	-	-	-	429,0
38	124,0	415,0	-	-	-	427,0
42	110,0	398,0	-	-	-	422,5
46	98,5	350,0	-	-	-	410,0
50	88,5	307,0	-	-	-	395,0
54	78,0	268,0	393,0	-	-	381,5
56	73,0	243,0	388,0	-	-	374,0
58	-	-	379,0	-	-	356,0
62	-	-	344,0	-	-	322,0
66	-	-	303,0	-	-	292,0
70	-	-	269,0	-	-	266,0
72	-	-	254,0	-	-	254,0
74	-	-	-	258,0	-	243,0
78	-	-	-	244,0	-	220,5
82	-	-	-	229,0	-	198,5
86	-	-	-	215,0	-	179,5
90	-	-	-	-	-	162,5
94	-	-	-	-	161,0	146,0
98	-	-	-	-	152,0	130,0
101	-	-	-	-	146,0	118,5
102	-	-	-	-	-	115,0
106	-	-	-	-	-	101,0
110	-	-	-	-	-	87,7
114	-	-	-	-	-	78,0
118	-	-	-	-	-	69,0
122	-	-	-	-	-	58,0
124	-	-	-	-	-	52,0

* Main boom angle 88° · Hauptauslegerwinkel 88° · Jarret de flèche principale 88° · Inclinazione braccio base 88° · Ángulo de pluma principal 88° · Ângulo da lança principal 88° · Угол подъема гл. стрелы 88°

90 m + 60 m

	SWSL					SFSL
	0 t	0 t - 800 t				
	85°	85°	75°	65°	55°	15°
m	t	t	t	t	t	t
26	-	344,0*	-	-	-	-
28	-	344,0*	-	-	-	-
30	-	337,0*	-	-	-	-
34	130,0	363,0	-	-	-	356,0
38	114,0	358,0	-	-	-	353,0
42	101,0	347,0	-	-	-	351,5
46	90,0	336,0	-	-	-	350,0
50	80,0	319,0	-	-	-	344,0
54	71,5	282,0	-	-	-	332,5
58	64,5	252,0	-	-	-	326,0
60	60,0	238,0	328,0	-	-	323,0
62	56,0	221,0	328,0	-	-	315,0
66	49,0	190,0	314,0	-	-	295,5
68	46,0	173,0	295,0	-	-	284,0
70	-	-	279,0	-	-	271,5
74	-	-	249,0	-	-	247,5
78	-	-	225,0	-	-	226,0
82	-	-	199,0	223,0	-	206,0
84	-	-	183,0	216,0	-	196,0
86	-	-	-	209,0	-	187,0
90	-	-	-	196,0	-	169,5
94	-	-	-	185,0	-	152,5
98	-	-	-	175,0	-	138,0
102	-	-	-	-	-	125,0
103	-	-	-	-	135,0	121,5
106	-	-	-	-	129,0	111,0
110	-	-	-	-	122,0	98,0
112	-	-	-	-	119,0	92,0
114	-	-	-	-	-	86,2
118	-	-	-	-	-	74,7
122	-	-	-	-	-	65,2
126	-	-	-	-	-	57,7
130	-	-	-	-	-	49,0
134	-	-	-	-	-	39,0
136	-	-	-	-	-	34,0

Main boom angle 88°, 85°, 75°, 65° and 55°, capacities for intermediate boom positions are calculated by the crane control system IC-1
Hauptauslegerwinkel 88°, 85°, 75°, 65° und 55°, Traglasten für Zwischenstellungen des Hauptauslegers werden von der Kransteuerung IC-1 berechnet
Jarret de flèche principale 88°, 85°, 75°, 65° et 55°, le système de commande de la grue IC-1 calcule les charges pour les positions intermédiaires de la flèche
Inclinazione braccio base 88°, 85°, 75°, 65° e 55°, capacità per posizioni intermedie del braccio sono calcolate dal sistema di controllo della gru IC-1
Ángulo de pluma principal 88°, 85°, 75°, 65° y 55° las capacidades para posiciones de pluma intermedias son calculadas por el sistema de control de grúa IC-1
Ângulos da lança principal 88°, 85°, 75°, 65° e 55°; as capacidades para posições da lança intermediária são calculadas pelo sistema de controle da grua IC-1
Грузоподъемность при углах подъема главной стрелы 88°, 85°, 75°, 65° и 55°, грузоподъемность в промежуточных положениях стрелы расчитывается системой управления краном IC-1

SWSL/SFSL

295 t + 60 t ZB | 19-30 m | 10,50 m | 9.8 m/s | 360° | ISO

90 m + 72 m

	SWSL					SFSL
	0 t	0 t - 800 t				
	85°	85°	75°	65°	55°	15°
m	t	t	t	t	t	t
30	-	287,0*	-	-	-	-
34	-	280,0*	-	-	-	-
38	104,0	299,0	-	-	-	294,0
42	91,5	298,0	-	-	-	292,5
46	80,5	291,0	-	-	-	291,5
50	71,5	284,0	-	-	-	290,0
54	63,5	275,0	-	-	-	286,5
58	56,5	259,0	-	-	-	281,0
62	50,0	233,0	-	-	-	275,0
66	44,5	206,0	281,0	-	-	269,0
70	39,0	181,0	276,0	-	-	258,5
74	33,5	159,0	256,0	-	-	246,0
78	29,0	137,0	231,0	-	-	230,5
80	27,0	125,0	219,0	-	-	221,0
82	-	-	209,0	-	-	211,5
86	-	-	189,0	-	-	193,0
90	-	-	167,0	188,0	-	175,5
94	-	-	146,0	180,0	-	159,0
98	-	-	-	169,0	-	144,0
102	-	-	-	160,0	-	130,0
106	-	-	-	151,0	-	117,5
110	-	-	-	143,0	-	106,0
112	-	-	-	-	112,0	100,0
114	-	-	-	-	109,0	94,5
118	-	-	-	-	103,0	83,5
122	-	-	-	-	98,5	72,7
124	-	-	-	-	96,0	67,5
126	-	-	-	-	-	62,5
130	-	-	-	-	-	53,7
134	-	-	-	-	-	47,5
138	-	-	-	-	-	40,2
142	-	-	-	-	-	31,2
144	-	-	-	-	-	26,5

* Main boom angle 88° · Hauptauslegerwinkel 88° · Jarret de flèche principale 88° · Inclinazione braccio base 88° · Ángulo de pluma principal 88° · Ângulo da lança principal 88° · Угол подъема гл. стрелы 88°

90 m + 84 m

	SWSL					SFSL
	0 t	0 t - 800 t				
	85°	85°	75°	65°	55°	15°
m	t	t	t	t	t	t
34	-	236,0*	-	-	-	-
38	-	231,0*	-	-	-	-
42	82,0	246,0	-	-	-	-
44	77,0	246,0	-	-	-	241,0
46	72,0	245,0	-	-	-	240,0
50	63,0	241,0	-	-	-	238,5
54	55,0	236,0	-	-	-	237,5
58	48,5	230,0	-	-	-	236,0
62	42,5	224,0	-	-	-	232,5
66	37,0	212,0	-	-	-	228,0
70	32,0	193,0	-	-	-	223,5
72	30,0	182,0	231,0	-	-	222,0
74	27,5	172,0	231,0	-	-	217,5
78	23,5	153,0	227,0	-	-	208,5
80	22,0	145,0	221,0	-	-	204,0
82	-	136,5	210,0	-	-	199,0
86	-	120,0	191,0	-	-	189,5
88	-	112,0	182,0	-	-	185,0
90	-	-	174,0	-	-	179,0
94	-	-	159,0	-	-	165,5
98	-	-	143,0	163,0	-	151,0
102	-	-	127,0	156,0	-	137,0
106	-	-	111,0	147,0	-	124,0
110	-	-	-	139,0	-	111,5
114	-	-	-	131,0	-	100,5
118	-	-	-	124,0	-	91,0
120	-	-	-	121,0	-	86,0
122	-	-	-	-	93,0	80,7
126	-	-	-	-	87,5	70,5
130	-	-	-	-	83,0	61,0
134	-	-	-	-	78,5	52,2
138	-	-	-	-	-	44,5
142	-	-	-	-	-	38,7
146	-	-	-	-	-	32,0
150	-	-	-	-	-	24,0
152	-	-	-	-	-	20,0
154	-	-	-	-	-	-

Main boom angle 88°, 85°, 75°, 65° and 55°, capacities for intermediate boom positions are calculated by the crane control system IC-1
Hauptauslegerwinkel 88°, 85°, 75°, 65° und 55°, Traglasten für Zwischenstellungen des Hauptauslegers werden von der Kransteuerung IC-1 berechnet
Jarret de flèche principale 88°, 85°, 75°, 65° et 55°, le système de commande de la grue IC-1 calcule les charges pour les positions intermédiaires de la flèche
Inclinazione braccio base 88°, 85°, 75°, 65° e 55°, capacità per posizioni intermedie del braccio sono calcolate dal sistema di controllo della gru IC-1
Ángulo de pluma principal 88°, 85°, 75°, 65° y 55° las capacidades para posiciones de pluma intermedias son calculadas por el sistema de control de grúa IC-1
Ângulos da lança principal 88°, 85°, 75°, 65° e 55°; as capacidades para posições da lança intermediária são calculadas pelo sistema de controle da grua IC-1
Грузоподъемность при углах подъема главной стрелы 88°, 85°, 75°, 65° и 55°, грузоподъемность в промежуточных положениях стрелы расчитывается системой управления краном IC-1

295 t + 60 t ZB | 19-30 m | 10,50 m | 9.8 m/s | 360° | ISO

90 m + 96 m

	SWSL					SFSL
	0 t	0 t - 800 t				
	85°	85°	75°	65°	55°	15°
m	t	t	t	t	t	t
38	-	193,0*	-	-	-	-
42	-	189,0*	-	-	-	-
46	64,5	198,0	-	-	-	-
48	60,0	198,0	-	-	-	193,0
50	56,0	197,0	-	-	-	192,5
54	48,5	194,0	-	-	-	191,5
58	42,0	190,0	-	-	-	190,5
62	36,0	185,0	-	-	-	189,5
66	31,0	180,0	-	-	-	187,5
70	26,0	175,0	-	-	-	185,0
74	22,0	170,0	-	-	-	182,5
76	20,0	167,0	-	-	-	181,0
78	-	160,0	187,0	-	-	179,5
82	-	144,0	187,0	-	-	174,0
86	-	129,0	184,0	-	-	165,5
90	-	115,5	174,0	-	-	158,0
94	-	103,0	159,0	-	-	151,0
98	-	90,7	145,0	-	-	145,5
100	-	84,5	139,0	-	-	143,0
102	-	-	134,0	-	-	139,0
106	-	-	122,0	128,0	-	129,0
110	-	-	109,0	128,0	-	117,0
114	-	-	97,5	125,0	-	105,2
118	-	-	85,0	120,0	-	94,2
122	-	-	-	113,0	-	85,2
126	-	-	-	107,0	-	76,7
130	-	-	-	101,0	77,5	67,5
132	-	-	-	95,0	75,5	63,0
134	-	-	-	-	73,0	58,5
138	-	-	-	-	69,0	50,0
142	-	-	-	-	65,0	42,2
146	-	-	-	-	61,5	34,7
150	-	-	-	-	-	29,5
154	-	-	-	-	-	23,7
156	-	-	-	-	-	20,5

90 m + 108 m

	SWSL					SFSL
	0 t	0 t - 800 t				
	85°	85°	75°	65°	55°	15°
m	t	t	t	t	t	t
40	-	152,0*	-	-	-	-
42	-	152,0*	-	-	-	-
46	-	149,0*	-	-	-	-
50	48,5	154,0	-	-	-	-
52	45,0	154,0	-	-	-	149,0
54	41,5	153,0	-	-	-	149,0
58	35,5	150,0	-	-	-	148,0
62	29,5	146,0	-	-	-	146,0
66	24,5	143,0	-	-	-	144,5
70	20,0	139,0	-	-	-	142,5
74	-	136,0	-	-	-	139,5
78	-	132,0	-	-	-	137,0
82	-	129,0	-	-	-	134,5
84	-	127,0	140,0	-	-	133,0
86	-	125,5	140,0	-	-	131,0
90	-	119,5	140,0	-	-	127,0
94	-	109,0	138,0	-	-	122,5
98	-	97,7	136,0	-	-	118,5
102	-	87,5	133,0	-	-	115,0
106	-	77,7	122,0	-	-	111,5
110	-	68,0	112,0	-	-	108,0
112	-	63,0	108,0	-	-	106,0
114	-	-	103,0	109,0	-	104,5
118	-	-	93,0	109,0	-	98,5
122	-	-	83,5	107,0	-	89,5
126	-	-	74,0	103,0	-	80,5
128	-	-	69,0	100,0	-	76,0
130	-	-	-	97,5	-	72,0
134	-	-	-	92,5	-	63,7
138	-	-	-	86,5	-	55,7
140	-	-	-	82,0	62,0	52,0
142	-	-	-	77,5	60,0	48,0
144	-	-	-	73,0	58,0	44,0
146	-	-	-	-	56,0	40,2
150	-	-	-	-	52,5	32,7
154	-	-	-	-	49,5	25,7
156	-	-	-	-	48,0	23,0
158	-	-	-	-	46,5	-
162	-	-	-	-	-	-

* Main boom angle 88° · Hauptauslegerwinkel 88° · Jarret de flèche principale 88° · Inclinazione braccio base 88° · Ángulo de pluma principal 88° · Ângulo da lança principal 88° · Угол подъема гл. стрелы 88°

Main boom angle 88°, 85°, 75°, 65° and 55°, capacities for intermediate boom positions are calculated by the crane control system IC-1
Hauptauslegerwinkel 88°, 85°, 75°, 65° und 55°, Traglasten für Zwischenstellungen des Hauptauslegers werden von der Kransteuerung IC-1 berechnet
Jarret de flèche principale 88°, 85°, 75°, 65° et 55°, le système de commande de la grue IC-1 calcule les charges pour les positions intermédiaires de la flèche
Inclinazione braccio base 88°, 85°, 75°, 65° e 55°, capacità per posizioni intermedie del braccio sono calcolate dal sistema di controllo della gru IC-1
Ángulo de pluma principal 88°, 85°, 75°, 65° y 55° las capacidades para posiciones de pluma intermedias son calculadas por el sistema de control de grúa IC-1
Ângulos da lança principal 88°, 85°, 75°, 65° e 55°; as capacidades para posições da lança intermediária são calculadas pelo sistema de controle da grua IC-1
Грузоподъемность при углах подъема главной стрелы 88°, 85°, 75°, 65° и 55°, грузоподъемность в промежуточных положениях стрелы расчитывается системой управления краном IC-1

SWSL/SFSL

295 t + 60 t ZB | 19-30 m | 10,50 m | 9.8 m/s | 360° | ISO

90 m + 120 m

	SWSL					SFSL
	0 t	0 t - 800 t				
	85°	85°	75°	65°	55°	15°
m	t	t	t	t	t	t
44	-	115,0*	-	-	-	-
46	-	115,0*	-	-	-	-
50	-	113,0*	-	-	-	-
54	-	110,0*	-	-	-	-
56	31,5	114,0	-	-	-	112,0
58	28,5	114,0	-	-	-	112,0
62	23,0	112,0	-	-	-	111,0
64	20,5	110,0	-	-	-	110,0
66	-	109,0	-	-	-	109,0
70	-	106,0	-	-	-	107,5
74	-	104,0	-	-	-	105,5
78	-	99,5	-	-	-	103,0
82	-	95,0	-	-	-	101,0
86	-	90,7	-	-	-	99,0
90	-	86,2	100,0	-	-	96,7
94	-	81,7	100,0	-	-	93,7
98	-	77,2	98,0	-	-	90,7
102	-	72,7	94,0	-	-	88,2
106	-	68,2	90,0	-	-	85,5
110	-	63,7	85,0	-	-	82,7
114	-	59,2	80,0	-	-	80,5
118	-	54,0	75,0	-	-	78,5
122	-	47,2	70,0	79,0	-	76,2
124	-	43,5	68,0	79,0	-	75,0
126	-	-	65,5	79,0	-	73,7
130	-	-	61,5	76,0	-	70,2
134	-	-	57,5	72,0	-	64,0
138	-	-	53,0	68,0	-	56,0
140	-	-	49,0	65,5	-	52,0
142	-	-	-	64,0	-	49,0
146	-	-	-	60,0	-	42,5
150	-	-	-	56,0	45,5	35,5
154	-	-	-	52,0	42,5	28,7
156	-	-	-	-	41,0	25,5
158	-	-	-	-	39,5	-
162	-	-	-	-	36,5	-
166	-	-	-	-	33,7	-
168	-	-	-	-	32,5	-
170	-	-	-	-	-	-

96 m + 48 m

	SWSL					SFSL
	0 t	0 t - 800 t				
	85°	85°	75°	65°	55°	15°
m	t	t	t	t	t	t
24	-	386,0*	-	-	-	-
26	-	377,0*	-	-	-	-
28	-	367,0*	-	-	-	-
30	153,0	403,0	-	-	-	395,0
34	133,0	396,0	-	-	-	394,0
38	118,0	382,0	-	-	-	392,0
42	104,0	368,0	-	-	-	389,5
46	93,0	353,0	-	-	-	382,0
50	83,5	311,0	-	-	-	367,5
54	75,0	274,0	365,0	-	-	358,0
56	70,0	250,0	365,0	-	-	353,0
58	-	-	362,0	-	-	343,0
62	-	-	346,0	-	-	317,5
66	-	-	317,0	-	-	287,5
70	-	-	280,0	-	-	261,0
74	-	-	248,0	-	-	238,0
77	-	-	-	239,0	-	221,2
78	-	-	-	235,0	-	215,5
82	-	-	-	220,0	-	194,0
86	-	-	-	206,0	-	175,0
90	-	-	-	194,0	-	158,5
94	-	-	-	-	-	143,0
97	-	-	-	-	146,0	131,2
98	-	-	-	-	143,0	127,5
102	-	-	-	-	136,0	113,0
104	-	-	-	-	132,0	106,0
106	-	-	-	-	-	99,2
110	-	-	-	-	-	86,5
114	-	-	-	-	-	74,5
118	-	-	-	-	-	64,5
122	-	-	-	-	-	57,0
126	-	-	-	-	-	47,2
128	-	-	-	-	-	41,5

* Main boom angle 88° · Hauptauslegerwinkel 88° · Jarret de flèche principale 88° · Inclinazione braccio base 88° · Ángulo de pluma principal 88° · Ângulo da lança principal 88° · Угол подъема гл. стрелы 88°

Main boom angle 88°, 85°, 75°, 65° and 55°, capacities for intermediate boom positions are calculated by the crane control system IC-1
Hauptauslegerwinkel 88°, 85°, 75°, 65° und 55°, Traglasten für Zwischenstellungen des Hauptauslegers werden von der Kransteuerung IC-1 berechnet
Jarret de flèche principale 88°, 85°, 75°, 65° et 55°, le système de commande de la grue IC-1 calcule les charges pour les positions intermédiaires de la flèche
Inclinazione braccio base 88°, 85°, 75°, 65° e 55°, capacità per posizioni intermedie del braccio sono calcolate dal sistema di controllo della gru IC-1
Ángulo de pluma principal 88°, 85°, 75°, 65° y 55° las capacidades para posiciones de pluma intermedias son calculadas por el sistema de control de grúa IC-1
Ângulos da lança principal 88°, 85°, 75°, 65° e 55°; as capacidades para posições da lança intermediária são calculadas pelo sistema de controle da grua IC-1
Грузоподъемность при углах подъема главной стрелы 88°, 85°, 75°, 65° и 55°, грузоподъемность в промежуточных положениях стрелы расчитывается системой управления краном IC-1

295 t + 60 t ZB | 19-30 m | 10,50 m | 9.8 m/s | 360° | ISO

96 m + 60 m

	SWSL					SFSL
	0 t	0 t - 800 t				
	85°	85°	75°	65°	55°	15°
m	t	t	t	t	t	t
28	-	318,0*	-	-	-	-
30	-	312,0*	-	-	-	-
34	-	298,0*	-	-	-	-
36	115,0	333,0	-	-	-	327,0
38	107,0	330,0	-	-	-	326,0
42	95,0	320,0	-	-	-	324,5
46	84,5	310,0	-	-	-	323,5
50	75,0	299,0	-	-	-	319,0
54	67,0	285,0	-	-	-	311,0
58	60,0	255,0	-	-	-	302,0
60	56,5	241,0	308,0	-	-	299,0
62	53,5	225,0	308,0	-	-	293,5
66	46,5	193,0	300,0	-	-	280,5
68	43,5	177,0	294,0	-	-	273,0
70	-	-	289,0	-	-	263,5
74	-	-	259,0	-	-	243,0
78	-	-	233,0	-	-	221,0
82	-	-	211,0	-	-	200,5
84	-	-	195,0	-	-	191,0
86	-	-	-	200,0	-	182,0
90	-	-	-	188,0	-	165,0
94	-	-	-	177,0	-	149,0
98	-	-	-	167,0	-	134,5
100	-	-	-	163,0	-	128,0
102	-	-	-	-	-	121,5
106	-	-	-	-	121,0	108,5
110	-	-	-	-	115,0	96,0
114	-	-	-	-	109,0	84,5
116	-	-	-	-	106,0	79,0
118	-	-	-	-	-	73,5
122	-	-	-	-	-	62,5
126	-	-	-	-	-	53,5
130	-	-	-	-	-	47,0
134	-	-	-	-	-	38,7
138	-	-	-	-	-	29,5
140	-	-	-	-	-	25,0
142	-	-	-	-	-	-

96 m + 72 m

	SWSL					SFSL
	0 t	0 t - 800 t				
	85°	85°	75°	65°	55°	15°
m	t	t	t	t	t	t
30	-	264,0*	-	-	-	-
34	-	260,0*	-	-	-	-
38	-	250,0*	-	-	-	-
40	91,0	277,0	-	-	-	271,0
42	85,5	275,0	-	-	-	270,0
46	75,5	269,0	-	-	-	268,5
50	66,5	262,0	-	-	-	267,5
54	58,5	254,0	-	-	-	265,5
58	52,0	246,0	-	-	-	261,0
62	46,0	236,0	-	-	-	255,0
66	40,5	209,0	256,0	-	-	249,0
70	35,5	184,0	256,0	-	-	241,0
74	31,5	162,0	249,0	-	-	229,5
78	27,0	140,0	239,0	-	-	218,5
80	25,0	128,0	227,0	-	-	213,0
82	-	-	216,0	-	-	204,5
86	-	-	196,0	-	-	187,5
90	-	-	175,0	-	-	171,0
92	-	-	165,0	175,0	-	163,0
94	-	-	154,0	172,0	-	155,0
96	-	-	143,0	167,0	-	147,0
98	-	-	-	162,0	-	140,0
102	-	-	-	152,0	-	126,5
106	-	-	-	144,0	-	114,0
110	-	-	-	136,0	-	102,7
112	-	-	-	133,0	-	97,5
114	-	-	-	-	-	92,0
115	-	-	-	-	100,0	89,2
118	-	-	-	-	96,5	81,2
122	-	-	-	-	91,0	71,0
126	-	-	-	-	86,5	61,2
130	-	-	-	-	-	51,5
134	-	-	-	-	-	43,0
138	-	-	-	-	-	37,0
142	-	-	-	-	-	30,0
144	-	-	-	-	-	26,0
146	-	-	-	-	-	-

* Main boom angle 88° · Hauptauslegerwinkel 88° · Jarret de flèche principale 88° · Inclinazione braccio base 88° · Ángulo de pluma principal 88° · Ângulo da lança principal 88° · Угол подъема гл. стрелы 88°

Main boom angle 88°, 85°, 75°, 65° and 55°, capacities for intermediate boom positions are calculated by the crane control system IC-1
Hauptauslegerwinkel 88°, 85°, 75°, 65° und 55°, Traglasten für Zwischenstellungen des Hauptauslegers werden von der Kransteuerung IC-1 berechnet
Jarret de flèche principale 88°, 85°, 75°, 65° et 55°, le système de commande de la grue IC-1 calcule les charges pour les positions intermédiaires de la flèche
Inclinazione braccio base 88°, 85°, 75°, 65° e 55°, capacità per posizioni intermedie del braccio sono calcolate dal sistema di controllo della gru IC-1
Ángulo de pluma principal 88°, 85°, 75°, 65° y 55° las capacidades para posiciones de pluma intermedias son calculadas por el sistema de control de grúa IC-1
Ângulos da lança principal 88°, 85°, 75°, 65° e 55°; as capacidades para posições da lança intermediária são calculadas pelo sistema de controle da grua IC-1
Грузоподъемность при углах подъема главной стрелы 88°, 85°, 75°, 65° и 55°, грузоподъемность в промежуточных положениях стрелы расчитывается системой управления краном IC-1

SWSL/SFSL

295 t + 60 t ZB | 19-30 m | 10,50 m | 9.8 m/s | 360° | ISO

96 m + 84 m

	SWSL					SFSL
	0 t	0 t - 800 t				
	85°	85°	75°	65°	55°	15°
m	t	t	t	t	t	t
34	-	219,0*	-	-	-	-
38	-	214,0*	-	-	-	-
42	-	207,0*	-	-	-	-
44	71,0	228,0	-	-	-	222,0
46	66,5	227,0	-	-	-	221,5
50	58,0	223,0	-	-	-	220,5
54	50,5	218,0	-	-	-	219,5
58	44,0	213,0	-	-	-	219,0
62	38,0	208,0	-	-	-	217,0
66	33,0	202,0	-	-	-	213,0
70	28,5	195,0	-	-	-	209,5
72	26,0	185,0	216,0	-	-	208,0
74	24,0	174,0	216,0	-	-	205,0
78	20,5	156,0	214,0	-	-	197,0
82	-	138,5	209,0	-	-	188,0
86	-	122,0	197,0	-	-	179,5
90	-	105,7	180,0	-	-	171,0
92	-	97,5	172,0	-	-	167,0
94	-	-	164,0	-	-	160,0
98	-	-	149,0	-	-	146,0
100	-	-	141,0	152,0	-	139,0
102	-	-	133,0	148,0	-	132,5
106	-	-	117,0	140,0	-	120,0
108	-	-	109,0	136,0	-	114,0
110	-	-	-	132,0	-	108,0
114	-	-	-	125,0	-	97,0
118	-	-	-	118,0	-	87,2
122	-	-	-	112,0	-	77,5
124	-	-	-	109,0	-	72,5
126	-	-	-	-	81,0	68,0
130	-	-	-	-	76,0	59,0
134	-	-	-	-	72,0	50,0
138	-	-	-	-	68,0	41,5
142	-	-	-	-	-	33,5
146	-	-	-	-	-	27,5
148	-	-	-	-	-	24,5
150	-	-	-	-	-	-

96 m + 96 m

	SWSL					SFSL
	0 t	0 t - 800 t				
	85°	85°	75°	65°	55°	15°
m	t	t	t	t	t	t
38	-	179,0*	-	-	-	-
42	-	176,0*	-	-	-	-
46	-	171,0*	-	-	-	-
48	54,5	185,0	-	-	-	181,0
50	51,0	185,0	-	-	-	180,5
54	44,0	182,0	-	-	-	179,5
58	37,5	179,0	-	-	-	179,0
62	32,0	175,0	-	-	-	178,5
66	27,0	171,0	-	-	-	177,0
70	22,5	166,0	-	-	-	174,5
72	20,5	164,0	-	-	-	173,0
74	-	162,0	-	-	-	172,0
78	-	157,0	176,0	-	-	170,0
82	-	146,0	176,0	-	-	166,5
86	-	131,0	174,0	-	-	159,5
90	-	117,5	171,0	-	-	151,5
94	-	104,7	164,0	-	-	145,5
98	-	92,2	150,0	-	-	140,0
100	-	86,0	144,0	-	-	137,0
102	-	-	138,0	-	-	133,5
106	-	-	126,0	-	-	124,0
108	-	-	120,0	119,0	-	118,0
110	-	-	114,0	119,0	-	112,5
114	-	-	102,0	118,0	-	101,7
118	-	-	90,0	113,0	-	91,5
120	-	-	83,5	110,0	-	86,5
122	-	-	-	107,0	-	81,7
126	-	-	-	101,0	-	73,0
130	-	-	-	96,0	-	64,5
134	-	-	-	91,0	66,5	56,0
138	-	-	-	-	62,5	48,0
142	-	-	-	-	59,0	40,0
146	-	-	-	-	55,5	32,2
150	-	-	-	-	52,0	25,0
152	-	-	-	-	-	21,5
154	-	-	-	-	-	-
158	-	-	-	-	-	-

* Main boom angle 88° · Hauptauslegerwinkel 88° · Jarret de flèche principale 88° · Inclinazione braccio base 88° · Ángulo de pluma principal 88° · Ângulo da lança principal 88° · Угол подъема гл. стрелы 88°

Main boom angle 88°, 85°, 75°, 65° and 55°, capacities for intermediate boom positions are calculated by the crane control system IC-1
Hauptauslegerwinkel 88°, 85°, 75°, 65° und 55°, Traglasten für Zwischenstellungen des Hauptauslegers werden von der Kransteuerung IC-1 berechnet
Jarret de flèche principale 88°, 85°, 75°, 65° et 55°, le système de commande de la grue IC-1 calcule les charges pour les positions intermédiaires de la flèche
Inclinazione braccio base 88°, 85°, 75°, 65° e 55°, capacità per posizioni intermedie del braccio sono calcolate dal sistema di controllo della gru IC-1
Ángulo de pluma principal 88°, 85°, 75°, 65° y 55° las capacidades para posiciones de pluma intermedias son calculadas por el sistema de control de grúa IC-1
Ângulos da lança principal 88°, 85°, 75°, 65° e 55°; as capacidades para posições da lança intermediária são calculadas pelo sistema de controle da grua IC-1
Грузоподъемность при углах подъема главной стрелы 88°, 85°, 75°, 65° и 55°, грузоподъемность в промежуточных положениях стрелы расчитывается системой управления краном IC-1

295 t + 60 t ZB | 19-30 m | 10,50 m | 9.8 m/s | 360° | ISO

96 m + 108 m

	SWSL					SFSL
	0 t	0 t - 800 t				
	85°	85°	75°	65°	55°	15°
m	t	t	t	t	t	t
42	-	143,0*	-	-	-	-
46	-	140,0*	-	-	-	-
50	-	137,0*	-	-	-	-
52	40,0	145,0	-	-	-	141,0
54	37,0	145,0	-	-	-	140,5
58	31,0	142,0	-	-	-	139,0
62	25,5	139,0	-	-	-	138,0
66	21,0	135,0	-	-	-	137,0
70	-	132,0	-	-	-	135,0
74	-	129,0	-	-	-	133,0
78	-	126,0	-	-	-	130,5
82	-	122,5	-	-	-	128,0
84	-	121,0	129,0	-	-	127,0
86	-	119,0	129,0	-	-	125,5
90	-	115,5	129,0	-	-	122,0
94	-	109,5	128,0	-	-	117,5
98	-	99,5	126,0	-	-	113,5
102	-	89,0	125,0	-	-	109,0
106	-	79,0	121,0	-	-	105,5
110	-	69,2	116,0	-	-	102,0
112	-	64,5	111,0	-	-	100,0
114	-	-	107,0	-	-	98,7
116	-	-	102,0	100,0	-	97,5
118	-	-	97,0	100,0	-	93,7
122	-	-	87,2	100,0	-	85,5
126	-	-	77,7	97,5	-	76,5
130	-	-	68,0	92,0	-	67,7
134	-	-	-	86,5	-	60,0
138	-	-	-	82,0	-	52,5
142	-	-	-	77,5	-	44,7
144	-	-	-	75,5	52,0	41,0
146	-	-	-	73,5	50,5	37,5
150	-	-	-	-	47,0	30,5
154	-	-	-	-	43,5	23,7
156	-	-	-	-	42,0	20,5
158	-	-	-	-	41,0	-
160	-	-	-	-	39,5	-
162	-	-	-	-	-	-
166	-	-	-	-	-	-

96 m + 120 m

	SWSL					SFSL
	0 t	0 t - 800 t				
	85°	85°	75°	65°	55°	15°
m	t	t	t	t	t	t
44	-	109,0*	-	-	-	-
46	-	109,0*	-	-	-	-
50	-	107,0*	-	-	-	-
54	-	104,0*	-	-	-	-
56	27,0	108,0	-	-	-	106,0
58	24,0	108,0	-	-	-	105,5
60	21,5	107,0	-	-	-	105,0
62	-	106,0	-	-	-	104,5
66	-	104,0	-	-	-	103,5
70	-	101,0	-	-	-	102,0
74	-	99,0	-	-	-	100,2
78	-	95,5	-	-	-	98,2
82	-	91,5	-	-	-	96,2
86	-	87,5	-	-	-	94,2
90	-	83,7	95,5	-	-	92,0
94	-	80,0	95,5	-	-	89,7
98	-	76,0	95,0	-	-	87,2
102	-	71,7	92,5	-	-	84,7
106	-	67,2	89,5	-	-	82,2
110	-	63,0	85,5	-	-	79,7
114	-	58,7	80,0	-	-	77,5
118	-	54,2	75,5	-	-	75,5
122	-	48,2	71,0	-	-	73,7
124	-	44,5	68,5	76,5	-	73,0
126	-	-	66,5	76,5	-	72,0
130	-	-	62,0	76,5	-	67,7
134	-	-	58,0	73,5	-	60,5
138	-	-	54,0	69,5	-	52,7
142	-	-	48,0	65,5	-	46,0
146	-	-	-	61,5	-	39,2
150	-	-	-	58,0	-	32,2
152	-	-	-	56,0	38,0	29,0
154	-	-	-	54,0	36,5	26,0
156	-	-	-	52,2	35,0	23,0
158	-	-	-	50,5	33,5	-
162	-	-	-	-	30,7	-
166	-	-	-	-	28,2	-
170	-	-	-	-	26,0	-
172	-	-	-	-	25,0	-

* Main boom angle 88° · Hauptauslegerwinkel 88° · Jarret de flèche principale 88° · Inclinazione braccio base 88° · Ángulo de pluma principal 88° · Ângulo da lança principal 88° · Угол подъема гл. стрелы 88°

Main boom angle 88°, 85°, 75°, 65° and 55°, capacities for intermediate boom positions are calculated by the crane control system IC-1
Hauptauslegerwinkel 88°, 85°, 75°, 65° und 55°, Traglasten für Zwischenstellungen des Hauptauslegers werden von der Kransteuerung IC-1 berechnet
Jarret de flèche principale 88°, 85°, 75°, 65° et 55°, le système de commande de la grue IC-1 calcule les charges pour les positions intermédiaires de la flèche
Inclinazione braccio base 88°, 85°, 75°, 65° e 55°, capacità per posizioni intermedie del braccio sono calcolate dal sistema di controllo della gru IC-1
Ángulo de pluma principal 88°, 85°, 75°, 65° y 55° las capacidades para posiciones de pluma intermedias son calculadas por el sistema de control de grúa IC-1
Ângulos da lança principal 88°, 85°, 75°, 65° e 55°; as capacidades para posições da lança intermediária são calculadas pelo sistema de controle da grua IC-1
Грузоподъемность при углах подъема главной стрелы 88°, 85°, 75°, 65° и 55°, грузоподъемность в промежуточных положениях стрелы расчитывается системой управления краном IC-1

295 t + 60 t ZB | 19-30 m | 10,50 m | 9.8 m/s | 360° | ISO

102 m + 48 m

	SWSL					SFSL
	0 t	0 t - 800 t				
	85°	85°	75°	65°	55°	15°
m	t	t	t	t	t	t
24	-	355,0*	-	-	-	-
26	-	347,0*	-	-	-	-
28	-	339,0*	-	-	-	-
30	-	330,0*	-	-	-	-
32	135,0	370,0	-	-	-	362,0
34	126,0	364,0	-	-	-	361,0
38	111,0	351,0	-	-	-	360,0
42	98,5	339,0	-	-	-	358,5
46	88,0	326,0	-	-	-	353,5
50	78,5	313,0	-	-	-	344,5
54	70,5	278,0	-	-	-	334,5
56	66,5	256,0	333,0	-	-	331,0
58	62,5	230,0	333,0	-	-	324,0
62	-	-	323,0	-	-	307,0
66	-	-	310,0	-	-	283,0
70	-	-	292,0	-	-	256,5
74	-	-	260,0	-	-	232,5
76	-	-	242,0	-	-	221,0
78	-	-	-	-	-	210,5
79	-	-	-	221,0	-	205,2
82	-	-	-	211,0	-	190,0
86	-	-	-	197,0	-	171,0
90	-	-	-	186,0	-	154,0
92	-	-	-	180,0	-	146,0
94	-	-	-	-	-	139,0
98	-	-	-	-	-	124,5
101	-	-	-	-	129,0	113,7
102	-	-	-	-	127,0	110,5
106	-	-	-	-	120,0	97,7
108	-	-	-	-	117,0	91,5
110	-	-	-	-	-	85,5
114	-	-	-	-	-	73,7
118	-	-	-	-	-	62,5
122	-	-	-	-	-	53,0
126	-	-	-	-	-	46,0
130	-	-	-	-	-	37,2
132	-	-	-	-	-	32,5

102 m + 60 m

	SWSL					SFSL
	0 t	0 t - 800 t				
	85°	85°	75°	65°	55°	15°
m	t	t	t	t	t	t
28	-	294,0*	-	-	-	-
30	-	288,0*	-	-	-	-
34	-	276,0*	-	-	-	-
36	108,0	306,0	-	-	-	300,0
38	101,0	304,0	-	-	-	300,0
42	89,5	295,0	-	-	-	298,5
46	79,0	286,0	-	-	-	297,0
50	70,0	277,0	-	-	-	294,0
54	62,5	268,0	-	-	-	289,0
58	55,5	257,0	-	-	-	282,5
62	49,5	229,0	285,0	-	-	276,0
66	44,0	197,0	282,0	-	-	266,0
68	41,0	181,0	278,0	-	-	259,0
70	-	-	273,0	-	-	253,0
74	-	-	263,0	-	-	236,5
78	-	-	241,0	-	-	215,5
82	-	-	218,0	-	-	195,5
86	-	-	191,0	-	-	177,5
88	-	-	-	186,0	-	169,0
90	-	-	-	180,0	-	161,0
94	-	-	-	169,0	-	145,0
98	-	-	-	159,0	-	130,0
102	-	-	-	151,0	-	117,0
104	-	-	-	147,0	-	111,0
106	-	-	-	-	-	105,0
110	-	-	-	-	107,0	93,5
114	-	-	-	-	101,0	82,2
118	-	-	-	-	96,0	71,2
119	-	-	-	-	94,5	68,6
122	-	-	-	-	-	61,0
126	-	-	-	-	-	51,2
130	-	-	-	-	-	42,2
134	-	-	-	-	-	36,0
138	-	-	-	-	-	29,0
140	-	-	-	-	-	25,0
142	-	-	-	-	-	-
146	-	-	-	-	-	-

* Main boom angle 88° · Hauptauslegerwinkel 88° · Jarret de flèche principale 88° · Inclinazione braccio base 88° · Ángulo de pluma principal 88° · Ângulo da lança principal 88° · Угол подъема гл. стрелы 88°

Main boom angle 88°, 85°, 75°, 65° and 55°, capacities for intermediate boom positions are calculated by the crane control system IC-1
Hauptauslegerwinkel 88°, 85°, 75°, 65° und 55°, Traglasten für Zwischenstellungen des Hauptauslegers werden von der Kransteuerung IC-1 berechnet
Jarret de flèche principale 88°, 85°, 75°, 65° et 55°, le système de commande de la grue IC-1 calcule les charges pour les positions intermédiaires de la flèche
Inclinazione braccio base 88°, 85°, 75°, 65° e 55°, capacità per posizioni intermedie del braccio sono calcolate dal sistema di controllo della gru IC-1
Ángulo de pluma principal 88°, 85°, 75°, 65° y 55° las capacidades para posiciones de pluma intermedias son calculadas por el sistema de control de grúa IC-1
Ângulos da lança principal 88°, 85°, 75°, 65° e 55°; as capacidades para posições da lança intermediária são calculadas pelo sistema de controle da grua IC-1
Грузоподъемность при углах подъема главной стрелы 88°, 85°, 75°, 65° и 55°, грузоподъемность в промежуточных положениях стрелы расчитывается системой управления краном IC-1

295 t + 60 t ZB | 19-30 m | 10,50 m | 9.8 m/s | 360° | ISO

102 m + 72 m

	SWSL					SFSL
	0 t	0 t - 800 t				
	85°	85°	75°	65°	55°	15°
m	t	t	t	t	t	t
30	-	244,0*	-	-	-	-
34	-	240,0*	-	-	-	-
38	-	231,0*	-	-	-	-
40	85,0	255,0	-	-	-	250,0
42	79,5	254,0	-	-	-	249,5
46	70,0	248,0	-	-	-	248,5
50	61,5	242,0	-	-	-	247,5
54	54,0	235,0	-	-	-	246,0
58	47,5	228,0	-	-	-	242,5
62	42,0	221,0	-	-	-	237,5
66	37,0	212,0	-	-	-	232,5
68	34,5	199,0	239,0	-	-	231,0
70	32,0	187,0	239,0	-	-	227,0
74	28,0	164,0	234,0	-	-	218,0
78	24,0	142,0	227,0	-	-	207,5
80	22,5	131,0	224,0	-	-	202,0
82	-	-	220,0	-	-	196,5
86	-	-	203,0	-	-	182,0
90	-	-	184,0	-	-	165,5
94	-	-	162,0	-	-	150,5
96	-	-	151,0	159,0	-	143,0
98	-	-	140,0	154,0	-	136,0
102	-	-	-	145,0	-	122,5
106	-	-	-	137,0	-	110,0
110	-	-	-	129,0	-	99,2
114	-	-	-	122,0	-	89,0
118	-	-	-	-	-	78,5
119	-	-	-	-	88,0	76,0
122	-	-	-	-	84,0	68,5
126	-	-	-	-	79,5	58,7
130	-	-	-	-	75,0	49,5
134	-	-	-	-	-	40,7
138	-	-	-	-	-	32,5
142	-	-	-	-	-	26,0
144	-	-	-	-	-	23,0

102 m + 84 m

	SWSL					SFSL
	0 t	0 t - 800 t				
	85°	85°	75°	65°	55°	15°
m	t	t	t	t	t	t
34	-	201,0*	-	-	-	-
38	-	198,0*	-	-	-	-
42	-	192,0*	-	-	-	-
44	65,5	210,0	-	-	-	206,0
46	61,0	210,0	-	-	-	205,5
50	53,0	206,0	-	-	-	204,5
54	46,0	201,0	-	-	-	203,5
58	40,0	197,0	-	-	-	202,5
62	34,5	192,0	-	-	-	200,5
66	29,5	187,0	-	-	-	197,5
70	25,0	182,0	-	-	-	195,0
74	21,0	177,0	197,0	-	-	192,0
78	-	158,0	196,0	-	-	186,0
82	-	140,5	192,0	-	-	178,0
86	-	124,0	187,0	-	-	170,0
90	-	107,7	182,0	-	-	162,5
92	-	99,5	177,0	-	-	159,0
94	-	-	170,0	-	-	153,5
98	-	-	155,0	-	-	141,5
102	-	-	139,0	-	-	128,0
104	-	-	131,0	128,0	-	121,0
106	-	-	123,0	128,0	-	115,5
110	-	-	107,0	125,0	-	104,2
114	-	-	-	118,0	-	93,5
118	-	-	-	111,0	-	83,2
122	-	-	-	105,0	-	74,0
126	-	-	-	100,0	-	65,5
128	-	-	-	-	72,0	61,0
130	-	-	-	-	69,5	56,5
134	-	-	-	-	65,5	47,7
138	-	-	-	-	61,5	39,5
142	-	-	-	-	58,0	31,7
146	-	-	-	-	-	24,0
148	-	-	-	-	-	20,0
150	-	-	-	-	-	-

* Main boom angle 88° · Hauptauslegerwinkel 88° · Jarret de flèche principale 88° · Inclinazione braccio base 88° · Ángulo de pluma principal 88° · Ângulo da lança principal 88° · Угол подъема гл. стрелы 88°

Main boom angle 88°, 85°, 75°, 65° and 55°, capacities for intermediate boom positions are calculated by the crane control system IC-1
Hauptauslegerwinkel 88°, 85°, 75°, 65° und 55°, Traglasten für Zwischenstellungen des Hauptauslegers werden von der Kransteuerung IC-1 berechnet
Jarret de flèche principale 88°, 85°, 75°, 65° et 55°, le système de commande de la grue IC-1 calcule les charges pour les positions intermédiaires de la flèche
Inclinazione braccio base 88°, 85°, 75°, 65° e 55°, capacità per posizioni intermedie del braccio sono calcolate dal sistema di controllo della gru IC-1
Ángulo de pluma principal 88°, 85°, 75°, 65° y 55° las capacidades para posiciones de pluma intermedias son calculadas por el sistema de control de grúa IC-1
Ângulos da lança principal 88°, 85°, 75°, 65° e 55°; as capacidades para posições da lança intermediária são calculadas pelo sistema de controle da grua IC-1
Грузоподъемность при углах подъема главной стрелы 88°, 85°, 75°, 65° и 55°, грузоподъемность в промежуточных положениях стрелы расчитывается системой управления краном IC-1

295 t + 60 t ZB | 19-30 m | 10,50 m | 9.8 m/s | 360° | ISO

102 m + 96 m

	SWSL					SFSL
	0 t	0 t - 800 t				
	85°	85°	75°	65°	55°	15°
m	t	t	t	t	t	t
38	-	166,0*	-	-	-	-
42	-	163,0*	-	-	-	-
46	-	158,0*	-	-	-	-
48	50,0	172,0	-	-	-	167,0
50	46,0	172,0	-	-	-	167,0
54	39,5	169,0	-	-	-	166,5
58	33,5	166,0	-	-	-	165,5
62	28,0	163,0	-	-	-	164,5
66	23,5	159,0	-	-	-	164,0
68	21,0	157,0	-	-	-	164,0
70	-	155,0	-	-	-	162,5
74	-	152,0	-	-	-	160,0
78	-	148,0	-	-	-	157,5
80	-	146,0	163,0	-	-	156,0
82	-	143,0	163,0	-	-	155,0
86	-	133,0	162,0	-	-	150,5
90	-	119,0	160,0	-	-	143,5
94	-	106,0	157,0	-	-	137,5
98	-	93,7	153,0	-	-	131,5
102	-	81,2	142,0	-	-	126,0
104	-	75,0	136,0	-	-	123,0
106	-	-	130,0	-	-	118,5
110	-	-	118,0	110,0	-	108,0
114	-	-	106,0	110,0	-	97,2
118	-	-	94,5	107,0	-	87,5
120	-	-	88,5	104,0	-	82,5
122	-	-	-	101,0	-	78,0
126	-	-	-	95,5	-	69,0
130	-	-	-	90,0	-	60,7
134	-	-	-	85,5	-	53,0
138	-	-	-	81,0	56,5	45,2
142	-	-	-	-	52,5	37,5
146	-	-	-	-	49,0	30,0
148	-	-	-	-	47,5	26,5
150	-	-	-	-	46,0	-
152	-	-	-	-	44,5	-
154	-	-	-	-	-	-

102 m + 108 m

	SWSL					SFSL
	0 t	0 t - 800 t				
	85°	85°	75°	65°	55°	15°
m	t	t	t	t	t	t
42	-	134,0*	-	-	-	-
46	-	131,0*	-	-	-	-
50	-	128,0*	-	-	-	-
52	35,5	134,0	-	-	-	133,0
54	32,5	134,0	-	-	-	132,0
58	26,5	132,0	-	-	-	131,0
62	21,5	129,0	-	-	-	130,0
66	-	126,0	-	-	-	128,5
70	-	122,0	-	-	-	127,5
74	-	119,0	-	-	-	126,0
78	-	116,0	-	-	-	124,0
82	-	113,0	-	-	-	122,0
86	-	109,5	123,0	-	-	119,5
90	-	106,5	123,0	-	-	116,5
94	-	103,5	122,0	-	-	112,5
98	-	98,7	121,0	-	-	108,0
102	-	90,2	120,0	-	-	103,5
106	-	80,2	117,0	-	-	99,2
110	-	70,5	115,0	-	-	96,0
112	-	65,5	113,0	-	-	94,5
114	-	-	110,0	-	-	92,7
118	-	-	100,0	92,5	-	88,7
122	-	-	90,7	92,5	-	82,0
126	-	-	81,2	91,0	-	73,0
130	-	-	71,7	86,0	-	64,2
132	-	-	67,0	83,5	-	60,0
134	-	-	-	81,0	-	56,2
138	-	-	-	76,5	-	49,0
142	-	-	-	72,0	-	42,0
146	-	-	-	68,0	44,5	34,7
148	-	-	-	66,0	42,5	31,0
150	-	-	-	-	41,0	27,7
152	-	-	-	-	39,5	24,5
154	-	-	-	-	38,0	-
158	-	-	-	-	35,0	-
162	-	-	-	-	32,7	-
164	-	-	-	-	31,5	-

* Main boom angle 88° · Hauptauslegerwinkel 88° · Jarret de flèche principale 88° · Inclinazione braccio base 88° · Ángulo de pluma principal 88° · Ângulo da lança principal 88° · Угол подъема гл. стрелы 88°

Main boom angle 88°, 85°, 75°, 65° and 55°, capacities for intermediate boom positions are calculated by the crane control system IC-1
Hauptauslegerwinkel 88°, 85°, 75°, 65° und 55°, Traglasten für Zwischenstellungen des Hauptauslegers werden von der Kransteuerung IC-1 berechnet
Jarret de flèche principale 88°, 85°, 75°, 65° et 55°, le système de commande de la grue IC-1 calcule les charges pour les positions intermédiaires de la flèche
Inclinazione braccio base 88°, 85°, 75°, 65° e 55°, capacità per posizioni intermedie del braccio sono calcolate dal sistema di controllo della gru IC-1
Ángulo de pluma principal 88°, 85°, 75°, 65° y 55° las capacidades para posiciones de pluma intermedias son calculadas por el sistema de control de grúa IC-1
Ângulos da lança principal 88°, 85°, 75°, 65° e 55°; as capacidades para posições da lança intermediária são calculadas pelo sistema de controle da grua IC-1
Грузоподъемность при углах подъема главной стрелы 88°, 85°, 75°, 65° и 55°, грузоподъемность в промежуточных положениях стрелы расчитывается системой управления краном IC-1

295 t + 60 t ZB | 19-30 m | 10,50 m | 9.8 m/s | 360° | ISO

102 m + 120 m

	SWSL					SFSL
	0 t	0 t - 800 t				
	85°	85°	75°	65°	55°	15°
m	t	t	t	t	t	t
44	-	102,0*	-	-	-	-
46	-	102,0*	-	-	-	-
50	-	100,0*	-	-	-	-
54	-	97,5*	-	-	-	-
56	-	102,0	-	-	-	99,5
58	-	102,0	-	-	-	99,2
62	-	101,0	-	-	-	98,2
66	-	98,5	-	-	-	96,7
70	-	96,5	-	-	-	95,7
74	-	94,0	-	-	-	94,7
78	-	90,5	-	-	-	93,2
82	-	87,2	-	-	-	91,5
86	-	84,0	-	-	-	89,5
90	-	80,7	-	-	-	87,7
92	-	79,0	91,0	-	-	87,0
94	-	77,2	91,0	-	-	85,7
98	-	73,7	90,5	-	-	83,0
102	-	70,0	90,0	-	-	80,2
106	-	66,0	88,0	-	-	77,5
110	-	62,0	84,5	-	-	75,0
114	-	58,0	80,5	-	-	73,0
118	-	54,0	76,0	-	-	70,7
122	-	48,5	71,5	-	-	68,5
124	-	45,0	69,5	-	-	67,5
126	-	-	67,5	73,5	-	66,5
130	-	-	63,0	73,5	-	63,0
134	-	-	59,5	73,0	-	56,7
138	-	-	55,5	69,5	-	49,2
142	-	-	51,0	65,0	-	42,0
144	-	-	47,0	63,0	-	38,5
146	-	-	-	61,0	-	35,5
150	-	-	-	57,5	-	29,2
152	-	-	-	55,7	-	26,0
154	-	-	-	54,0	-	-
156	-	-	-	52,2	29,5	-
158	-	-	-	50,5	28,0	-
162	-	-	-	-	25,2	-
166	-	-	-	-	22,7	-
168	-	-	-	-	21,5	-

108 m + 48 m

	SWSL					SFSL
	0 t	0 t - 800 t				
	85°	85°	75°	65°	55°	15°
m	t	t	t	t	t	t
24	-	324,0*	-	-	-	-
26	-	320,0*	-	-	-	-
28	-	313,0*	-	-	-	-
30	-	305,0*	-	-	-	-
32	127,0	338,0	-	-	-	332,0
34	118,0	335,0	-	-	-	331,0
38	104,0	323,0	-	-	-	330,0
42	92,0	311,0	-	-	-	328,5
46	82,0	300,0	-	-	-	325,0
50	73,0	288,0	-	-	-	317,5
54	65,5	278,0	-	-	-	309,0
58	58,5	237,0	310,0	-	-	298,5
62	-	-	305,0	-	-	287,0
66	-	-	293,0	-	-	271,5
70	-	-	282,0	-	-	250,0
74	-	-	263,0	-	-	225,0
76	-	-	255,0	-	-	213,0
78	-	-	-	-	-	203,0
82	-	-	-	200,0	-	183,0
86	-	-	-	187,0	-	164,5
90	-	-	-	176,0	-	148,0
94	-	-	-	166,0	-	133,0
98	-	-	-	-	-	119,5
102	-	-	-	-	-	106,5
104	-	-	-	-	114,0	100,0
106	-	-	-	-	111,0	94,0
110	-	-	-	-	105,0	82,2
111	-	-	-	-	103,0	79,3
114	-	-	-	-	-	70,7
118	-	-	-	-	-	59,7
122	-	-	-	-	-	49,5
126	-	-	-	-	-	39,5
130	-	-	-	-	-	33,2
134	-	-	-	-	-	26,0
136	-	-	-	-	-	21,5

* Main boom angle 88° · Hauptauslegerwinkel 88° · Jarret de flèche principale 88° · Inclinazione braccio base 88° · Ángulo de pluma principal 88° · Ângulo da lança pGrincipal 88° · Угол подъема гл. стрелы 88°

Main boom angle 88°, 85°, 75°, 65° and 55°, capacities for intermediate boom positions are calculated by the crane control system IC-1
Hauptauslegerwinkel 88°, 85°, 75°, 65° und 55°, Traglasten für Zwischenstellungen des Hauptauslegers werden von der Kransteuerung IC-1 berechnet
Jarret de flèche principale 88°, 85°, 75°, 65° et 55°, le système de commande de la grue IC-1 calcule les charges pour les positions intermédiaires de la flèche
Inclinazione braccio base 88°, 85°, 75°, 65° e 55°, capacità per posizioni intermedie del braccio sono calcolate dal sistema di controllo della gru IC-1
Ángulo de pluma principal 88°, 85°, 75°, 65° y 55° las capacidades para posiciones de pluma intermedias son calculadas por el sistema de control de grúa IC-1
Ângulos da lança principal 88°, 85°, 75°, 65° e 55°; as capacidades para posições da lança intermediária são calculadas pelo sistema de controle da grua IC-1
Грузоподъемность при углах подъема главной стрелы 88°, 85°, 75°, 65° и 55°, грузоподъемность в промежуточных положениях стрелы расчитывается системой управления краном IC-1

295 t + 60 t ZB | 19-30 m | 10,50 m | 9.8 m/s | 360° | ISO

108 m + 60 m

	SWSL					SFSL
	0 t	0 t - 800 t				
	85°	85°	75°	65°	55°	15°
m	t	t	t	t	t	t
28	-	271,0*	-	-	-	-
30	-	266,0*	-	-	-	-
34	-	255,0*	-	-	-	-
36	101,0	282,0	-	-	-	276,0
38	94,5	279,0	-	-	-	275,0
42	83,0	271,0	-	-	-	274,0
46	73,0	263,0	-	-	-	272,5
50	65,0	254,0	-	-	-	271,0
54	57,5	245,0	-	-	-	267,0
58	51,0	237,0	-	-	-	261,5
62	45,5	227,0	-	-	-	255,0
64	42,5	217,0	260,0	-	-	251,0
66	40,5	201,0	260,0	-	-	245,0
70	35,5	169,0	251,0	-	-	234,0
74	-	-	243,0	-	-	222,0
78	-	-	235,0	-	-	207,0
82	-	-	226,0	-	-	188,5
86	-	-	203,0	-	-	170,5
88	-	-	187,0	-	-	162,0
90	-	-	-	170,0	-	154,5
94	-	-	-	160,0	-	139,0
98	-	-	-	150,0	-	124,5
102	-	-	-	142,0	-	112,0
106	-	-	-	134,0	-	100,5
110	-	-	-	-	-	89,2
113	-	-	-	-	93,5	80,8
114	-	-	-	-	92,0	78,2
118	-	-	-	-	87,0	67,7
122	-	-	-	-	82,5	57,7
126	-	-	-	-	-	48,2
130	-	-	-	-	-	39,2
134	-	-	-	-	-	30,2
138	-	-	-	-	-	23,2
140	-	-	-	-	-	20,5
142	-	-	-	-	-	-

108 m + 72 m

	SWSL					SFSL
	0 t	0 t - 800 t				
	85°	85°	75°	65°	55°	15°
m	t	t	t	t	t	t
30	-	225,0*	-	-	-	-
34	-	221,0*	-	-	-	-
38	-	213,0*	-	-	-	-
40	78,5	234,0	-	-	-	229,0
42	73,5	234,0	-	-	-	228,5
46	64,0	228,0	-	-	-	228,0
50	56,0	222,0	-	-	-	227,5
54	49,5	216,0	-	-	-	226,5
58	43,0	210,0	-	-	-	224,0
62	37,5	203,0	-	-	-	220,0
66	32,5	197,0	-	-	-	215,5
70	28,5	189,0	220,0	-	-	211,0
74	24,5	167,0	218,0	-	-	203,5
78	20,5	145,0	213,0	-	-	194,5
80	-	134,0	210,0	-	-	190,0
82	-	-	206,0	-	-	185,0
86	-	-	200,0	-	-	173,5
90	-	-	191,0	-	-	159,0
94	-	-	170,0	-	-	143,5
98	-	-	148,0	145,0	-	129,5
100	-	-	137,0	141,0	-	123,0
102	-	-	-	136,0	-	116,5
106	-	-	-	128,0	-	104,5
110	-	-	-	121,0	-	93,7
114	-	-	-	114,0	-	83,7
118	-	-	-	109,0	-	74,0
122	-	-	-	-	75,5	64,5
126	-	-	-	-	71,0	55,2
130	-	-	-	-	67,0	46,2
134	-	-	-	-	63,5	37,7
138	-	-	-	-	-	29,2
140	-	-	-	-	-	25,0
142	-	-	-	-	-	-
146	-	-	-	-	-	-
150	-	-	-	-	-	-

* Main boom angle 88° · Hauptauslegerwinkel 88° · Jarret de flèche principale 88° · Inclinazione braccio base 88° · Ángulo de pluma principal 88° · Ângulo da lança principal 88° · Угол подъема гл. стрелы 88°

Main boom angle 88°, 85°, 75°, 65° and 55°, capacities for intermediate boom positions are calculated by the crane control system IC-1
Hauptauslegerwinkel 88°, 85°, 75°, 65° und 55°, Traglasten für Zwischenstellungen des Hauptauslegers werden von der Kransteuerung IC-1 berechnet
Jarret de flèche principale 88°, 85°, 75°, 65° et 55°, le système de commande de la grue IC-1 calcule les charges pour les positions intermédiaires de la flèche
Inclinazione braccio base 88°, 85°, 75°, 65° e 55°, capacità per posizioni intermedie del braccio sono calcolate dal sistema di controllo della gru IC-1
Ángulo de pluma principal 88°, 85°, 75°, 65° y 55° las capacidades para posiciones de pluma intermedias son calculadas por el sistema de control de grúa IC-1
Ângulos da lança principal 88°, 85°, 75°, 65° e 55°; as capacidades para posições da lança intermediária são calculadas pelo sistema de controle da grua IC-1
Грузоподъемность при углах подъема главной стрелы 88°, 85°, 75°, 65° и 55°, грузоподъемность в промежуточных положениях стрелы расчитывается системой управления краном IC-1

295 t + 60 t ZB | 19-30 m | 10,50 m | 9.8 m/s | 360° | ISO

108 m + 84 m

	SWSL					SFSL
	0 t	0 t - 800 t				
	85°	85°	75°	65°	55°	15°
m	t	t	t	t	t	t
34	-	186,0*	-	-	-	-
38	-	183,0*	-	-	-	-
42	-	177,0*	-	-	-	-
44	59,5	194,0	-	-	-	189,0
46	55,5	194,0	-	-	-	188,5
50	48,0	189,0	-	-	-	187,5
54	41,0	185,0	-	-	-	187,0
58	35,5	181,0	-	-	-	186,5
62	30,0	176,0	-	-	-	185,0
66	25,5	172,0	-	-	-	182,5
70	21,0	167,0	-	-	-	179,5
74	-	162,0	-	-	-	177,0
76	-	159,0	182,0	-	-	176,0
78	-	156,0	182,0	-	-	174,0
82	-	142,5	179,0	-	-	165,5
86	-	126,0	175,0	-	-	158,5
90	-	109,5	170,0	-	-	151,5
92	-	101,0	168,0	-	-	148,0
94	-	-	166,0	-	-	144,5
98	-	-	160,0	-	-	135,0
102	-	-	145,0	-	-	122,5
106	-	-	129,0	118,0	-	110,5
110	-	-	113,0	117,0	-	99,2
114	-	-	-	110,0	-	88,5
118	-	-	-	104,0	-	78,5
122	-	-	-	98,5	-	69,5
126	-	-	-	93,0	-	61,2
128	-	-	-	90,5	-	57,0
130	-	-	-	-	-	52,7
132	-	-	-	-	59,5	48,5
134	-	-	-	-	58,0	44,2
138	-	-	-	-	54,0	36,2
142	-	-	-	-	50,5	28,5
144	-	-	-	-	49,0	24,5
146	-	-	-	-	-	-
150	-	-	-	-	-	-
154	-	-	-	-	-	-

108 m + 96 m

	SWSL					SFSL
	0 t	0 t - 800 t				
	85°	85°	75°	65°	55°	15°
m	t	t	t	t	t	t
38	-	152,0*	-	-	-	-
42	-	150,0*	-	-	-	-
46	-	146,0*	-	-	-	-
48	44,5	158,0	-	-	-	155,0
50	40,5	158,0	-	-	-	154,5
54	34,5	156,0	-	-	-	153,5
58	28,5	153,0	-	-	-	153,0
62	23,5	149,0	-	-	-	152,5
64	21,5	148,0	-	-	-	152,0
66	-	146,0	-	-	-	151,0
70	-	143,0	-	-	-	149,0
74	-	140,0	-	-	-	147,5
78	-	136,0	-	-	-	145,5
82	-	133,0	151,0	-	-	143,0
86	-	128,5	150,0	-	-	140,0
90	-	120,0	148,0	-	-	134,5
94	-	107,5	146,0	-	-	126,5
98	-	95,0	143,0	-	-	121,0
102	-	82,7	139,0	-	-	115,5
104	-	76,5	137,0	-	-	113,0
106	-	-	134,0	-	-	110,5
110	-	-	123,0	-	-	102,7
114	-	-	111,0	101,0	-	92,2
118	-	-	99,0	99,5	-	82,2
122	-	-	87,0	93,5	-	73,0
126	-	-	-	88,0	-	64,2
130	-	-	-	83,0	-	55,7
134	-	-	-	78,5	-	48,2
138	-	-	-	74,0	-	41,2
140	-	-	-	72,0	-	37,5
142	-	-	-	-	45,5	33,7
146	-	-	-	-	42,0	26,5
148	-	-	-	-	40,5	23,0
150	-	-	-	-	39,0	-
154	-	-	-	-	36,5	-
156	-	-	-	-	35,0	-
158	-	-	-	-	-	-

* Main boom angle 88° · Hauptauslegerwinkel 88° · Jarret de flèche principale 88° · Inclinazione braccio base 88° · Ángulo de pluma principal 88° · Ângulo da lança principal 88° · Угол подъема гл. стрелы 88°

Main boom angle 88°, 85°, 75°, 65° and 55°, capacities for intermediate boom positions are calculated by the crane control system IC-1
Hauptauslegerwinkel 88°, 85°, 75°, 65° und 55°, Traglasten für Zwischenstellungen des Hauptauslegers werden von der Kransteuerung IC-1 berechnet
Jarret de flèche principale 88°, 85°, 75°, 65° et 55°, le système de commande de la grue IC-1 calcule les charges pour les positions intermédiaires de la flèche
Inclinazione braccio base 88°, 85°, 75°, 65° e 55°, capacità per posizioni intermedie del braccio sono calcolate dal sistema di controllo della gru IC-1
Ángulo de pluma principal 88°, 85°, 75°, 65° y 55° las capacidades para posiciones de pluma intermedias son calculadas por el sistema de control de grúa IC-1
Ângulos da lança principal 88°, 85°, 75°, 65° e 55°; as capacidades para posições da lança intermediária são calculadas pelo sistema de controle da grua IC-1
Грузоподъемность при углах подъема главной стрелы 88°, 85°, 75°, 65° и 55°, грузоподъемность в промежуточных положениях стрелы расчитывается системой управления краном IC-1

SWSL/SFSL

CC 9800

295 t + 60 t ZB | 19-30 m | 10,50 m | 9.8 m/s | 360° | ISO

108 m + 108 m

	SWSL					SFSL
	0 t	0 t - 800 t				
	85°	85°	75°	65°	55°	15°
m	t	t	t	t	t	t
42	-	122,0*	-	-	-	-
46	-	121,0*	-	-	-	-
50	-	118,0*	-	-	-	-
52	30,5	126,0	-	-	-	123,0
54	27,5	126,0	-	-	-	122,5
58	22,0	124,0	-	-	-	122,0
62	-	121,0	-	-	-	121,0
66	-	118,0	-	-	-	120,0
70	-	115,0	-	-	-	119,5
74	-	112,0	-	-	-	117,5
78	-	109,0	-	-	-	115,5
82	-	106,5	-	-	-	114,0
86	-	103,5	-	-	-	112,0
88	-	102,0	116,0	-	-	111,0
90	-	100,5	116,0	-	-	110,0
94	-	97,5	116,0	-	-	107,0
98	-	94,5	115,0	-	-	102,5
102	-	89,7	113,0	-	-	98,0
106	-	81,5	112,0	-	-	93,2
110	-	71,5	110,0	-	-	90,0
114	-	61,5	108,0	-	-	86,7
116	-	56,5	106,0	-	-	85,0
118	-	-	104,0	-	-	83,0
122	-	-	94,5	83,5	-	76,7
126	-	-	84,7	83,5	-	68,0
130	-	-	75,5	79,0	-	59,5
134	-	-	65,5	74,0	-	51,7
138	-	-	-	69,5	-	44,2
142	-	-	-	65,5	-	37,5
146	-	-	-	61,5	-	31,0
150	-	-	-	58,0	34,0	24,2
152	-	-	-	-	32,5	21,0
154	-	-	-	-	31,0	-
158	-	-	-	-	28,5	-
162	-	-	-	-	25,7	-
166	-	-	-	-	23,5	-
168	-	-	-	-	22,5	-

108 m + 120 m

	SWSL					SFSL
	0 t	0 t - 800 t				
	85°	85°	75°	65°	55°	15°
m	t	t	t	t	t	t
46	-	95,0*	-	-	-	-
50	-	93,0*	-	-	-	-
54	-	90,5*	-	-	-	-
56	-	95,5	-	-	-	93,0
58	-	95,5	-	-	-	92,7
62	-	94,5	-	-	-	92,0
66	-	92,5	-	-	-	91,0
70	-	90,0	-	-	-	89,7
74	-	88,0	-	-	-	88,5
78	-	85,5	-	-	-	87,2
82	-	83,0	-	-	-	85,5
86	-	80,0	-	-	-	83,7
90	-	77,0	-	-	-	82,0
94	-	74,2	86,0	-	-	80,2
98	-	71,2	86,0	-	-	78,5
102	-	67,7	85,5	-	-	76,0
106	-	64,0	84,0	-	-	73,0
110	-	60,2	82,5	-	-	70,0
114	-	56,7	80,0	-	-	67,5
118	-	53,0	76,0	-	-	65,2
122	-	48,5	72,0	-	-	62,7
124	-	46,0	70,0	-	-	61,5
126	-	-	68,0	-	-	60,5
128	-	-	66,0	67,0	-	59,5
130	-	-	64,0	67,0	-	57,5
134	-	-	60,0	67,0	-	52,0
138	-	-	56,5	63,0	-	44,7
142	-	-	52,5	58,5	-	37,5
146	-	-	46,0	55,0	-	30,7
150	-	-	-	51,0	-	24,7
152	-	-	-	49,2	-	22,0
154	-	-	-	47,5	-	-
158	-	-	-	44,5	-	-
162	-	-	-	41,5	-	-
166	-	-	-	-	-	-
170	-	-	-	-	-	-
174	-	-	-	-	-	-

* Main boom angle 88° · Hauptauslegerwinkel 88° · Jarret de flèche principale 88° · Inclinazione braccio base 88° · Ángulo de pluma principal 88° · Ângulo da lança principal 88° · Угол подъема гл. стрелы 88°

Main boom angle 88°, 85°, 75°, 65° and 55°, capacities for intermediate boom positions are calculated by the crane control system IC-1
Hauptauslegerwinkel 88°, 85°, 75°, 65° und 55°, Traglasten für Zwischenstellungen des Hauptauslegers werden von der Kransteuerung IC-1 berechnet
Jarret de flèche principale 88°, 85°, 75°, 65° et 55°, le système de commande de la grue IC-1 calcule les charges pour les positions intermédiaires de la flèche
Inclinazione braccio base 88°, 85°, 75°, 65° e 55°, capacità per posizioni intermedie del braccio sono calcolate dal sistema di controllo della gru IC-1
Ángulo de pluma principal 88°, 85°, 75°, 65° y 55° las capacidades para posiciones de pluma intermedias son calculadas por el sistema de control de grúa IC-1
Ângulos da lança principal 88°, 85°, 75°, 65° e 55°; as capacidades para posições da lança intermediária são calculadas pelo sistema de controle da grua IC-1
Грузоподъемность при углах подъема главной стрелы 88°, 85°, 75°, 65° и 55°, грузоподъемность в промежуточных положениях стрелы расчитывается системой управления краном IC-1

SWSL S1 / SFSL S1

295 t + 60 t ZB · 19-30 m · 10,50 m · 9.8 m/s · 360° · ISO

60 m + 36 m

	SWSL					SFSL
	0 t	0 t - 800 t				
	85°	85°	75°	65°	55°	15°
m	t	t	t	t	t	t
18	-	585,0*	-	-	-	-
20	-	567,0*	-	-	-	-
22	-	531,0*	-	-	-	-
24	269,0	605,0	-	-	-	609,0
26	248,0	589,0	-	-	-	609,0
28	229,0	568,0	-	-	-	609,0
30	214,0	538,0	-	-	-	609,0
34	186,0	444,0	-	-	-	607,0
38	159,0	377,0	-	-	-	599,0
39	153,0	363,0	580,0	-	-	587,5
42	137,0	325,0	497,0	-	-	556,0
46	-	-	415,0	-	-	502,0
50	-	-	354,0	-	-	443,0
52	-	-	330,0	-	-	417,0
54	-	-	-	394,0	-	393,0
58	-	-	-	362,0	-	349,0
62	-	-	-	329,0	-	318,5
63	-	-	-	318,0	-	311,7
66	-	-	-	-	-	289,5
67	-	-	-	-	283,0	281,7
70	-	-	-	-	268,0	259,5
72	-	-	-	-	259,0	245,0
74	-	-	-	-	-	231,5
78	-	-	-	-	-	205,5
82	-	-	-	-	-	181,0
86	-	-	-	-	-	157,5
88	-	-	-	-	-	146,0

60 m + 48 m

m	t	t	t	t	t	t
22	-	457,0*	-	-	-	-
24	-	446,0*	-	-	-	-
26	-	423,0*	-	-	-	-
28	215,0	478,0	-	-	-	479,0
30	200,0	469,0	-	-	-	479,0
34	175,0	445,0	-	-	-	479,0
38	154,0	405,0	-	-	-	479,0
42	134,0	350,0	-	-	-	479,0
45	121,0	316,5	466,0	-	-	469,5
46	117,0	306,0	447,0	-	-	461,0
50	103,0	272,0	381,0	-	-	430,0
54	92,0	242,0	331,0	-	-	404,0
58	-	-	291,0	-	-	364,0
62	-	-	260,0	329,0	-	327,0
64	-	-	246,0	316,0	-	309,0
66	-	-	-	304,0	-	295,0
70	-	-	-	274,0	-	272,0
74	-	-	-	246,0	-	248,5
75	-	-	-	239,0	-	242,2
76	-	-	-	-	236,0	236,0
78	-	-	-	-	229,0	224,0
82	-	-	-	-	215,0	201,0
84	-	-	-	-	208,0	190,0
86	-	-	-	-	-	180,0
90	-	-	-	-	-	160,5
94	-	-	-	-	-	141,5
96	-	-	-	-	-	132,0

60 m + 60 m

	SWSL					SFSL
	0 t	0 t - 800 t				
	85°	85°	75°	65°	55°	15°
m	t	t	t	t	t	t
26	-	370,0*	-	-	-	-
28	-	356,0*	-	-	-	-
30	-	343,0*	-	-	-	-
32	176,0	378,0	-	-	-	380,0
34	164,0	375,0	-	-	-	380,0
38	145,0	363,0	-	-	-	380,0
42	129,0	345,0	-	-	-	380,0
46	115,0	317,0	-	-	-	380,0
50	101,0	282,0	-	-	-	380,0
52	95,5	266,0	370,0	-	-	378,0
54	90,0	252,0	345,0	-	-	365,0
58	80,0	226,0	303,0	-	-	343,0
62	72,0	205,0	270,0	-	-	322,5
66	65,0	176,0	241,0	-	-	302,5
69	-	-	223,5	285,0	-	285,0
70	-	-	218,0	280,0	-	278,0
74	-	-	197,0	254,0	-	254,0
76	-	-	188,0	241,0	-	244,0
78	-	-	-	229,0	-	234,5
82	-	-	-	207,0	-	215,0
86	-	-	-	188,0	197,0	195,5
90	-	-	-	-	186,0	177,0
94	-	-	-	-	176,0	159,5
95	-	-	-	-	173,0	155,2
98	-	-	-	-	-	143,0
102	-	-	-	-	-	127,5
106	-	-	-	-	-	112,5
108	-	-	-	-	-	105,0

60 m + 72 m

m	t	t	t	t	t	t
30	-	293,0*	-	-	-	-
34	-	279,0*	-	-	-	-
36	143,0	301,0	-	-	-	302,0
38	134,0	299,0	-	-	-	302,0
42	119,0	293,0	-	-	-	302,0
46	106,0	286,0	-	-	-	302,0
50	95,5	269,0	-	-	-	301,0
54	86,0	249,0	-	-	-	300,0
58	76,5	223,0	297,0	-	-	298,0
62	67,5	201,0	266,0	-	-	285,0
66	59,5	183,0	238,0	-	-	269,0
70	53,0	167,0	214,0	-	-	254,0
74	47,5	151,0	194,0	-	-	240,0
76	45,0	140,0	185,0	-	-	233,0
77	-	-	180,5	231,0	-	230,2
78	-	-	176,0	225,0	-	227,5
82	-	-	161,0	203,0	-	216,0
86	-	-	148,0	185,0	-	201,5
90	-	-	-	168,0	-	185,0
94	-	-	-	154,0	-	169,0
95	-	-	-	151,0	166,0	165,0
96	-	-	-	148,0	164,0	161,0
98	-	-	-	-	159,0	153,5
102	-	-	-	-	150,0	138,5
106	-	-	-	-	142,0	124,5
110	-	-	-	-	-	111,5
114	-	-	-	-	-	98,5
118	-	-	-	-	-	86,0
120	-	-	-	-	-	80,0

For explanations see page 59 · Bemerkungen siehe Seite 59 ·
Pour plus de détails, voir page 59 · Per spiegazioni vedere a pagina 59 ·
Véase p. 59 para más información · Para explicações, ver página 59 · Объяснения см. на стр. 59

SWSL S1 / SFSL S1

295 t + 60 t ZB | 19-30 m | 10,50 m | 9.8 m/s | 360° | ISO

60 m + 84 m

	SWSL					SFSL
	0 t	0 t - 800 t				
	85°	85°	75°	65°	55°	15°
m	t	t	t	t	t	t
32	-	234,0*	-	-	-	-
34	-	234,0*	-	-	-	-
38	-	228,0*	-	-	-	-
40	116,0	239,0	-	-	-	239,0
42	110,0	238,0	-	-	-	239,0
46	97,5	234,0	-	-	-	239,0
50	87,0	230,0	-	-	-	239,0
54	77,5	223,0	-	-	-	238,0
58	69,5	210,0	-	-	-	236,0
62	62,5	197,0	-	-	-	233,0
64	59,0	189,0	230,0	-	-	232,0
66	55,5	180,0	230,0	-	-	228,5
70	48,5	164,0	211,0	-	-	223,5
74	43,0	150,0	191,0	-	-	215,5
78	37,5	137,0	173,0	-	-	204,0
82	33,0	126,0	158,0	-	-	193,0
86	29,0	113,5	145,0	181,0	-	183,0
88	27,0	106,0	138,0	173,0	-	178,0
90	-	-	133,0	165,0	-	174,0
94	-	-	122,0	151,0	-	166,0
98	-	-	113,0	138,0	-	157,5
102	-	-	-	127,0	-	146,0
104	-	-	-	122,0	140,0	139,0
106	-	-	-	117,0	136,0	132,5
108	-	-	-	113,0	132,0	126,0
110	-	-	-	-	129,0	120,0
114	-	-	-	-	120,0	108,0
118	-	-	-	-	111,0	96,5
122	-	-	-	-	-	85,5
126	-	-	-	-	-	74,7
130	-	-	-	-	-	64,2
132	-	-	-	-	-	59,0

* Main boom angle 88° · Hauptauslegerwinkel 88° · Jarret de flèche principale 88° · Inclinazione braccio base 88° · Ángulo de pluma principal 88° · Ângulo da lança principal 88° · Угол подъема гл. стрелы 88°

60 m + 96 m

	SWSL					SFSL
	0 t	0 t - 800 t				
	85°	85°	75°	65°	55°	15°
m	t	t	t	t	t	t
36	-	185,0**	-	-	-	-
38	-	184,0**	-	-	-	-
42	-	181,0**	-	-	-	-
44	95,0	187,0	-	-	-	187,0
46	89,5	187,0	-	-	-	187,0
50	79,5	184,0	-	-	-	186,0
54	70,5	182,0	-	-	-	186,0
58	62,5	179,0	-	-	-	185,0
62	55,5	171,0	-	-	-	182,5
66	49,5	163,0	-	-	-	180,0
70	43,5	156,0	176,0	-	-	177,0
74	38,0	145,0	175,0	-	-	173,5
78	32,5	132,0	169,0	-	-	170,0
82	27,7	121,5	153,0	-	-	166,5
86	23,7	111,5	140,0	-	-	162,0
88	22,0	107,0	134,0	-	-	159,0
90	-	102,7	128,0	-	-	155,0
92	-	98,5	122,0	153,0	-	151,0
94	-	94,7	117,0	146,0	-	147,0
98	-	85,0	108,0	134,0	-	139,5
100	-	79,0	104,0	128,0	-	136,0
102	-	-	99,5	122,0	-	133,0
106	-	-	92,0	112,0	-	127,0
110	-	-	85,0	104,0	-	121,0
113	-	-	-	97,5	116,0	115,5
114	-	-	-	95,5	115,0	113,0
118	-	-	-	88,5	106,0	102,5
120	-	-	-	85,0	102,0	97,0
122	-	-	-	-	98,0	92,0
126	-	-	-	-	90,5	82,2
128	-	-	-	-	87,5	77,5
130	-	-	-	-	-	72,7
134	-	-	-	-	-	63,5
138	-	-	-	-	-	54,5
142	-	-	-	-	-	45,5
144	-	-	-	-	-	41,0

Main boom angle 88°, 85°, 75°, 65° and 55°, capacities for intermediate boom positions are calculated by the crane control system IC-1
Hauptauslegerwinkel 88°, 85°, 75°, 65° und 55°, Traglasten für Zwischenstellungen des Hauptauslegers werden von der Kransteuerung IC-1 berechnet
Jarret de flèche principale 88°, 85°, 75°, 65° et 55°, le système de commande de la grue IC-1 calcule les charges pour les positions intermédiaires de la flèche
Inclinazione braccio base 88°, 85°, 75°, 65° e 55°, capacità per posizioni intermedie del braccio sono calcolate dal sistema di controllo della gru IC-1
Ángulo de pluma principal 88°, 85°, 75°, 65° y 55° las capacidades para posiciones de pluma intermedias son calculadas por el sistema de control de grúa IC-1
Ângulos da lança principal 88°, 85°, 75°, 65° e 55°; as capacidades para posições da lança intermediária são calculadas pelo sistema de controle da grua IC-1
Грузоподъемность при углах подъема главной стрелы 88°, 85°, 75°, 65° и 55°, грузоподъемность в промежуточных положениях стрелы расчитывается системой управления краном IC-1

SWSL S1 / SFSL S1

295 t + 60 t ZB | 19-30 m | 10,50 m | 9.8 m/s | 360° | ISO

60 m + 108 m

	SWSL					SFSL
	0 t	0 t - 800 t				
	85°	85°	75°	65°	55°	15°
m	t	t	t	t	t	t
40	-	145,0*	-	-	-	-
42	-	144,0*	-	-	-	-
46	-	142,0*	-	-	-	-
48	76,5	145,0	-	-	-	145,0
50	72,0	145,0	-	-	-	145,0
54	63,5	143,0	-	-	-	144,0
58	56,0	141,0	-	-	-	142,0
62	49,0	139,0	-	-	-	141,0
66	43,0	136,0	-	-	-	138,5
70	38,0	131,0	-	-	-	136,0
74	33,0	127,0	-	-	-	133,5
76	31,0	124,0	127,0	-	-	132,0
78	28,5	122,0	127,0	-	-	130,5
82	24,5	117,0	127,0	-	-	127,5
84	22,5	114,0	126,0	-	-	126,0
86	-	109,5	125,0	-	-	124,5
90	-	100,5	124,0	-	-	121,5
94	-	92,2	115,0	-	-	118,5
98	-	85,0	106,0	-	-	116,0
100	-	81,5	101,0	109,0	-	115,0
102	-	78,2	97,0	109,0	-	113,0
106	-	72,0	89,5	109,0	-	110,0
108	-	69,0	85,5	105,0	-	109,0
110	-	-	82,0	101,0	-	107,5
114	-	-	75,5	93,0	-	103,5
118	-	-	70,0	85,5	-	98,7
122	-	-	64,5	79,0	94,0	94,2
126	-	-	-	73,0	88,0	88,0
130	-	-	-	67,0	81,0	79,5
132	-	-	-	64,5	77,5	75,0
134	-	-	-	-	74,5	70,7
138	-	-	-	-	69,0	62,2
140	-	-	-	-	66,0	58,0
142	-	-	-	-	-	54,0
146	-	-	-	-	-	46,2
150	-	-	-	-	-	38,5
154	-	-	-	-	-	30,5
156	-	-	-	-	-	26,5

* Main boom angle 88° · Hauptauslegerwinkel 88° · Jarret de flèche principale 88° · Inclinazione braccio base 88° · Ángulo de pluma principal 88° · Ângulo da lança principal 88° · Угол подъема гл. стрелы 88°

Main boom angle 88°, 85°, 75°, 65° and 55°, capacities for intermediate boom positions are calculated by the crane control system IC-1

Hauptauslegerwinkel 88°, 85°, 75°, 65° und 55°, Traglasten für Zwischenstellungen des Hauptauslegers werden von der Kransteuerung IC-1 berechnet

Jarret de flèche principale 88°, 85°, 75°, 65° et 55°, le système de commande de la grue IC-1 calcule les charges pour les positions intermédiaires de la flèche

Inclinazione braccio base 88°, 85°, 75°, 65° e 55°, capacità per posizioni intermedie del braccio sono calcolate dal sistema di controllo della gru IC-1

Ángulo de pluma principal 88°, 85°, 75°, 65° y 55° las capacidades para posiciones de pluma intermedias son calculadas por el sistema de control de grúa IC-1

Ângulos da lança principal 88°, 85°, 75°, 65° e 55°; as capacidades para posições da lança intermediária são calculadas pelo sistema de controle da grua IC-1

Грузоподъемность при углах подъема главной стрелы 88°, 85°, 75°, 65° и 55°, грузоподъемность в промежуточных положениях стрелы расчитывается системой управления краном IC-1

66 m + 36 m

	SWSL					SFSL
	0 t	0 t - 800 t				
	85°	85°	75°	65°	55°	15°
m	t	t	t	t	t	t
18	-	556,0*	-	-	-	-
20	-	540,0*	-	-	-	-
22	-	506,0*	-	-	-	-
24	258,0	574,0	-	-	-	576,0
26	238,0	563,0	-	-	-	576,0
28	221,0	541,0	-	-	-	576,0
30	206,0	514,0	-	-	-	576,0
34	180,0	454,0	-	-	-	575,0
38	156,0	383,0	-	-	-	574,0
41	140,0	342,5	565,0	-	-	569,5
42	135,0	330,0	536,0	-	-	565,0
46	-	-	442,0	-	-	514,0
50	-	-	375,0	-	-	455,0
54	-	-	324,0	-	-	404,0
56	-	-	-	382,0	-	381,0
58	-	-	-	366,0	-	360,0
62	-	-	-	338,0	-	323,0
66	-	-	-	312,0	-	290,0
70	-	-	-	-	-	264,5
71	-	-	-	-	261,0	259,2
74	-	-	-	-	249,0	241,5
76	-	-	-	-	242,0	229,0
78	-	-	-	-	-	217,0
82	-	-	-	-	-	193,5
86	-	-	-	-	-	171,0
90	-	-	-	-	-	149,5
92	-	-	-	-	-	139,0

66 m + 48 m

m	t	t	t	t	t	t
22	-	436,0*	-	-	-	-
24	-	425,0*	-	-	-	-
26	-	403,0*	-	-	-	-
28	207,0	452,0	-	-	-	455,0
30	192,0	448,0	-	-	-	455,0
34	168,0	424,0	-	-	-	455,0
38	149,0	388,0	-	-	-	455,0
42	132,0	350,0	-	-	-	455,0
46	115,0	311,0	-	-	-	455,0
47	111,5	301,5	456,0	-	-	450,0
50	102,0	275,0	404,0	-	-	436,0
54	90,5	246,0	348,0	-	-	413,0
58	-	-	305,0	-	-	374,0
62	-	-	270,0	-	-	336,5
64	-	-	256,0	320,0	-	319,0
66	-	-	242,0	308,0	-	303,0
70	-	-	-	286,0	-	273,0
74	-	-	-	262,0	-	247,0
77	-	-	-	242,0	-	231,7
78	-	-	-	-	-	227,5
80	-	-	-	-	221,0	219,0
82	-	-	-	-	214,0	209,0
86	-	-	-	-	203,0	189,0
87	-	-	-	-	200,0	184,0
90	-	-	-	-	-	169,5
94	-	-	-	-	-	151,5
98	-	-	-	-	-	134,0
102	-	-	-	-	-	117,0
104	-	-	-	-	-	109,0

SWSL S1 / SFSL S1

CC 9800

295 t + 60 t ZB | 19-30 m | 10,50 m | 9.8 m/s | 360° | ISO

66 m + 60 m

	SWSL					SFSL
	0 t	0 t - 800 t				
	85°	85°	75°	65°	55°	15°
m	t	t	t	t	t	t
26	-	350,0*	-	-	-	-
28	-	339,0*	-	-	-	-
30	-	327,0*	-	-	-	-
32	169,0	361,0	-	-	-	362,0
34	158,0	358,0	-	-	-	362,0
38	139,0	346,0	-	-	-	362,0
42	124,0	328,0	-	-	-	362,0
46	111,0	302,0	-	-	-	362,0
50	100,0	275,0	-	-	-	362,0
54	88,5	252,0	363,0	-	-	361,0
58	78,5	230,0	318,0	-	-	345,0
62	70,5	208,0	281,0	-	-	328,0
66	63,0	182,0	251,0	-	-	310,5
70	-	-	227,0	-	-	286,0
72	-	-	216,0	273,0	-	272,0
74	-	-	206,0	264,0	-	259,5
78	-	-	187,0	244,0	-	235,5
82	-	-	-	221,0	-	214,0
86	-	-	-	201,0	-	198,5
88	-	-	-	192,0	-	191,0
89	-	-	-	-	189,0	187,0
90	-	-	-	-	187,0	183,0
94	-	-	-	-	176,0	166,5
98	-	-	-	-	167,0	150,5
102	-	-	-	-	-	135,5
106	-	-	-	-	-	120,5
110	-	-	-	-	-	106,2
114	-	-	-	-	-	92,5
116	-	-	-	-	-	85,5

66 m + 72 m

m	t	t	t	t	t	t
30	-	280,0*	-	-	-	-
34	-	266,0*	-	-	-	-
36	137,0	287,0	-	-	-	288,0
38	129,0	286,0	-	-	-	288,0
42	114,0	280,0	-	-	-	288,0
46	102,0	274,0	-	-	-	288,0
50	91,5	258,0	-	-	-	287,0
54	82,0	239,0	-	-	-	287,0
58	74,0	220,0	-	-	-	286,0
60	70,0	210,0	285,0	-	-	285,0
62	66,0	202,0	281,0	-	-	280,0
66	58,0	186,0	250,0	-	-	270,0
70	51,5	170,0	224,0	-	-	261,0
74	46,0	155,0	203,0	-	-	249,5
78	41,0	132,0	184,0	-	-	237,0
80	-	-	176,0	230,0	-	231,0
82	-	-	168,0	218,0	-	220,5
86	-	-	154,0	197,0	-	200,5
88	-	-	147,0	188,0	-	191,0
90	-	-	-	180,0	-	184,5
94	-	-	-	164,0	-	172,0
98	-	-	-	150,0	159,0	158,5
100	-	-	-	144,0	155,0	151,0
102	-	-	-	-	151,0	144,0
106	-	-	-	-	143,0	130,5
110	-	-	-	-	135,0	117,5
114	-	-	-	-	-	105,0
118	-	-	-	-	-	93,0
122	-	-	-	-	-	81,2
124	-	-	-	-	-	75,5

66 m + 84 m

	SWSL					SFSL
	0 t	0 t - 800 t				
	85°	85°	75°	65°	55°	15°
m	t	t	t	t	t	t
32	-	223,0*	-	-	-	-
34	-	223,0*	-	-	-	-
38	-	217,0*	-	-	-	-
40	111,0	228,0	-	-	-	229,0
42	105,0	228,0	-	-	-	229,0
46	93,0	225,0	-	-	-	229,0
50	83,0	221,0	-	-	-	229,0
54	74,0	214,0	-	-	-	229,0
58	66,0	201,0	-	-	-	227,0
62	59,0	188,0	-	-	-	224,5
66	53,0	175,0	222,0	-	-	221,0
70	47,5	163,0	222,0	-	-	216,5
74	41,5	152,0	200,0	-	-	211,5
78	36,0	140,0	181,0	-	-	206,5
82	31,7	128,5	165,0	-	-	200,0
86	27,7	116,0	151,0	-	-	191,0
88	26,0	109,0	144,0	185,0	-	186,0
90	-	-	138,0	177,0	-	181,5
94	-	-	127,0	161,0	-	171,0
98	-	-	117,0	147,0	-	159,5
100	-	-	112,0	141,0	-	154,0
102	-	-	-	135,0	-	149,0
106	-	-	-	124,0	-	137,5
107	-	-	-	121,5	134,0	134,2
110	-	-	-	115,0	129,0	124,5
114	-	-	-	-	122,0	112,5
118	-	-	-	-	116,0	101,5
120	-	-	-	-	113,0	96,0
122	-	-	-	-	-	90,7
126	-	-	-	-	-	80,2
130	-	-	-	-	-	70,0
134	-	-	-	-	-	60,0
136	-	-	-	-	-	55,0

* Main boom angle 88° · Hauptauslegerwinkel 88° · Jarret de flèche principale 88° · Inclinazione braccio base 88° · Ángulo de pluma principal 88° · Ângulo da lança principal 88° · Угол подъема гл. стрелы 88°

Main boom angle 88°, 85°, 75°, 65° and 55°, capacities for intermediate boom positions are calculated by the crane control system IC-1

Hauptauslegerwinkel 88°, 85°, 75°, 65° und 55°, Traglasten für Zwischenstellungen des Hauptauslegers werden von der Kransteuerung IC-1 berechnet

Jarret de flèche principale 88°, 85°, 75°, 65° et 55°, le système de commande de la grue IC-1 calcule les charges pour les positions intermédiaires de la flèche

Inclinazione braccio base 88°, 85°, 75°, 65° e 55°, capacità per posizioni intermedie del braccio sono calcolate dal sistema di controllo della gru IC-1

Ángulo de pluma principal 88°, 85°, 75°, 65° y 55° las capacidades para posiciones de pluma intermedias son calculadas por el sistema de control de grúa IC-1

Ângulos da lança principal 88°, 85°, 75°, 65° e 55°; as capacidades para posições da lança intermediária são calculadas pelo sistema de controle da grua IC-1

Грузоподъемность при углах подъема главной стрелы 88°, 85°, 75°, 65° и 55°, грузоподъемность в промежуточных положениях стрелы расчитывается системой управления краном IC-1

SWSL S1 / SFSL S1

295 t + 60 t ZB | 19-30 m | 10,50 m | 9.8 m/s | 360° | ISO

66 m + 96 m

	SWSL					SFSL
	0 t	0 t - 800 t				
	85°	85°	75°	65°	55°	15°
m	t	t	t	t	t	t
36	-	177,0*	-	-	-	-
38	-	177,0*	-	-	-	-
42	-	174,0*	-	-	-	-
44	90,5	180,0	-	-	-	180,0
46	85,0	180,0	-	-	-	180,0
50	75,5	177,0	-	-	-	179,0
54	66,5	175,0	-	-	-	179,0
58	59,0	172,0	-	-	-	178,0
62	52,5	165,0	-	-	-	176,0
66	46,5	157,0	-	-	-	174,0
70	41,0	148,0	-	-	-	172,0
72	39,0	144,0	170,0	-	-	171,0
74	36,5	140,0	170,0	-	-	169,0
78	31,0	132,0	169,0	-	-	165,5
82	26,7	122,5	160,0	-	-	162,0
86	22,5	113,5	146,0	-	-	158,5
88	20,5	109,0	140,0	-	-	157,0
90	-	104,5	133,0	-	-	155,5
94	-	96,2	122,0	-	-	152,0
96	-	92,5	117,0	148,0	-	150,0
98	-	86,7	112,0	143,0	-	146,0
100	-	81,0	108,0	136,0	-	142,0
102	-	-	103,0	130,0	-	139,0
106	-	-	95,5	120,0	-	132,5
110	-	-	88,5	110,0	-	126,0
112	-	-	85,0	106,0	-	123,0
114	-	-	-	101,0	-	117,0
117	-	-	-	95,5	110,0	108,5
118	-	-	-	93,5	109,0	106,0
122	-	-	-	86,5	103,0	96,0
126	-	-	-	-	97,5	86,2
130	-	-	-	-	90,5	77,0
132	-	-	-	-	87,0	72,5
134	-	-	-	-	-	68,0
138	-	-	-	-	-	59,2
142	-	-	-	-	-	50,7
146	-	-	-	-	-	42,2
148	-	-	-	-	-	38,0

66 m + 108 m

	SWSL					SFSL
	0 t	0 t - 800 t				
	85°	85°	75°	65°	55°	15°
m	t	t	t	t	t	t
40	-	139,0*	-	-	-	-
42	-	138,0*	-	-	-	-
46	-	136,0*	-	-	-	-
48	72,5	139,0	-	-	-	139,0
50	68,0	139,0	-	-	-	139,0
54	60,0	138,0	-	-	-	139,0
58	52,5	136,0	-	-	-	138,0
62	46,0	135,0	-	-	-	136,5
66	40,5	131,0	-	-	-	134,5
70	35,0	126,0	-	-	-	132,0
74	30,5	121,0	-	-	-	130,0
78	26,0	116,0	123,0	-	-	127,5
82	22,2	110,5	123,0	-	-	124,5
84	20,5	108,0	123,0	-	-	123,0
86	-	105,0	122,0	-	-	121,5
90	-	98,5	121,0	-	-	118,5
94	-	91,2	119,0	-	-	115,5
98	-	83,7	110,0	-	-	113,0
102	-	76,5	101,0	-	-	110,5
104	-	73,0	97,0	106,0	-	109,0
106	-	69,5	93,0	106,0	-	107,5
110	-	62,5	85,5	106,0	-	104,5
112	-	59,0	82,0	103,0	-	103,0
114	-	-	79,0	99,0	-	101,5
118	-	-	72,5	91,0	-	98,7
122	-	-	67,0	84,0	-	95,5
126	-	-	-	77,5	89,0	90,5
130	-	-	-	71,5	87,5	83,0
134	-	-	-	66,0	81,0	74,2
138	-	-	-	-	74,5	65,7
142	-	-	-	-	69,0	57,7
144	-	-	-	-	66,0	54,0
146	-	-	-	-	-	50,0
150	-	-	-	-	-	42,2
154	-	-	-	-	-	34,7
158	-	-	-	-	-	27,2
160	-	-	-	-	-	23,5

* Main boom angle 88° · Hauptauslegerwinkel 88° · Jarret de flèche principale 88° · Inclinazione braccio base 88° · Ángulo de pluma principal 88° · Ângulo da lança principal 88° · Угол подъема гл. стрелы 88°

Main boom angle 88°, 85°, 75°, 65° and 55°, capacities for intermediate boom positions are calculated by the crane control system IC-1
Hauptauslegerwinkel 88°, 85°, 75°, 65° und 55°, Traglasten für Zwischenstellungen des Hauptauslegers werden von der Kransteuerung IC-1 berechnet
Jarret de flèche principale 88°, 85°, 75°, 65° et 55°, le système de commande de la grue IC-1 calcule les charges pour les positions intermédiaires de la flèche
Inclinazione braccio base 88°, 85°, 75°, 65° e 55°, capacità per posizioni intermedie del braccio sono calcolate dal sistema di controllo della gru IC-1
Ángulo de pluma principal 88°, 85°, 75°, 65° y 55° las capacidades para posiciones de pluma intermedias son calculadas por el sistema de control de grúa IC-1
Ângulos da lança principal 88°, 85°, 75°, 65° e 55°; as capacidades para posições da lança intermediária são calculadas pelo sistema de controle da grua IC-1
Грузоподъемность при углах подъема главной стрелы 88°, 85°, 75°, 65° и 55°, грузоподъемность в промежуточных положениях стрелы расчитывается системой управления краном IC-1

SWSL S1 / SFSL S1

CC 9800

295 t + 60 t ZB | 19-30 m | 10,50 m | 9.8 m/s | 360° | ISO

72 m + 36 m

	SWSL					SFSL
	0 t	0 t - 800 t				
	85°	85°	75°	65°	55°	15°
m	t	t	t	t	t	t
20	-	509,0*	-	-	-	-
22	-	479,0*	-	-	-	-
24	248,0	537,0	-	-	-	540,0
26	229,0	531,0	-	-	-	540,0
28	213,0	512,0	-	-	-	540,0
30	198,0	486,0	-	-	-	540,0
34	174,0	434,0	-	-	-	540,0
38	154,0	389,0	-	-	-	538,0
42	133,0	335,0	538,0	-	-	537,0
44	124,0	313,0	523,0	-	-	526,0
46	-	-	474,0	-	-	511,0
50	-	-	398,0	-	-	460,0
54	-	-	341,0	-	-	411,0
56	-	-	318,0	-	-	388,0
58	-	-	-	-	-	367,0
59	-	-	-	359,0	-	357,5
62	-	-	-	338,0	-	330,0
66	-	-	-	313,0	-	296,0
68	-	-	-	302,0	-	280,0
70	-	-	-	-	-	267,0
74	-	-	-	-	242,0	241,0
78	-	-	-	-	227,0	221,5
79	-	-	-	-	224,0	217,2
82	-	-	-	-	-	202,0
86	-	-	-	-	-	180,5
90	-	-	-	-	-	160,5
94	-	-	-	-	-	141,5
96	-	-	-	-	-	132,0

72 m + 60 m

	SWSL					SFSL
	0 t	0 t - 800 t				
	85°	85°	75°	65°	55°	15°
m	t	t	t	t	t	t
26	-	327,0*	-	-	-	-
28	-	321,0*	-	-	-	-
30	-	309,0*	-	-	-	-
32	162,0	339,0	-	-	-	340,0
34	152,0	339,0	-	-	-	340,0
38	134,0	328,0	-	-	-	340,0
42	119,0	310,0	-	-	-	340,0
46	107,0	285,0	-	-	-	340,0
50	96,5	261,0	-	-	-	340,0
54	87,0	238,0	343,0	-	-	340,0
58	77,0	222,0	334,0	-	-	331,0
62	69,0	205,0	294,0	-	-	316,0
66	61,5	187,0	262,0	-	-	304,0
70	-	-	235,0	-	-	287,0
74	-	-	213,0	264,0	-	263,5
78	-	-	194,0	247,0	-	240,0
82	-	-	-	231,0	-	218,5
86	-	-	-	212,0	-	199,0
90	-	-	-	194,0	-	181,5
92	-	-	-	-	175,0	174,0
94	-	-	-	-	171,0	168,0
98	-	-	-	-	162,0	155,0
102	-	-	-	-	155,0	140,5
106	-	-	-	-	-	126,0
110	-	-	-	-	-	112,5
114	-	-	-	-	-	99,7
118	-	-	-	-	-	87,0
120	-	-	-	-	-	80,5

72 m + 48 m

m	t	t	t	t	t	t
22	-	410,0*	-	-	-	-
24	-	400,0*	-	-	-	-
26	-	381,0*	-	-	-	-
28	199,0	427,0	-	-	-	427,0
30	185,0	423,0	-	-	-	427,0
34	162,0	400,0	-	-	-	427,0
38	143,0	366,0	-	-	-	427,0
42	128,0	331,0	-	-	-	427,0
46	113,0	300,0	-	-	-	427,0
48	106,0	289,0	433,0	-	-	427,0
50	100,0	277,0	429,0	-	-	418,0
54	88,5	248,0	367,0	-	-	398,0
58	-	-	320,0	-	-	378,0
62	-	-	282,0	-	-	341,5
66	-	-	252,0	-	-	308,5
67	-	-	245,5	302,0	-	300,7
68	-	-	239,0	297,0	-	293,0
70	-	-	-	286,0	-	279,0
74	-	-	-	267,0	-	252,0
78	-	-	-	250,0	-	228,5
80	-	-	-	238,0	-	218,0
82	-	-	-	-	-	207,5
83	-	-	-	-	204,0	203,0
86	-	-	-	-	196,0	192,0
90	-	-	-	-	186,0	176,0
94	-	-	-	-	-	158,5
98	-	-	-	-	-	142,0
102	-	-	-	-	-	126,0
106	-	-	-	-	-	110,5
108	-	-	-	-	-	103,0

72 m + 72 m

m	t	t	t	t	t	t
30	-	265,0*	-	-	-	-
34	-	252,0*	-	-	-	-
36	132,0	271,0	-	-	-	272,0
38	124,0	271,0	-	-	-	272,0
42	109,0	266,0	-	-	-	272,0
46	97,5	259,0	-	-	-	272,0
50	87,5	244,0	-	-	-	272,0
54	78,5	226,0	-	-	-	271,0
58	70,5	208,0	-	-	-	270,0
60	67,0	199,0	268,0	-	-	270,0
62	64,0	190,0	268,0	-	-	266,5
66	56,5	178,0	263,0	-	-	259,0
70	50,0	165,0	235,0	-	-	250,5
74	44,5	153,0	212,0	-	-	241,0
78	39,5	136,0	192,0	-	-	233,0
82	-	-	175,0	225,0	-	221,5
86	-	-	160,0	211,0	-	204,5
90	-	-	146,0	192,0	-	186,5
94	-	-	-	174,0	-	171,0
98	-	-	-	160,0	-	156,5
102	-	-	-	146,0	147,0	145,5
106	-	-	-	-	140,0	134,0
110	-	-	-	-	133,0	121,5
113	-	-	-	-	129,0	112,0
114	-	-	-	-	-	109,0
118	-	-	-	-	-	97,7
122	-	-	-	-	-	86,7
126	-	-	-	-	-	75,7
130	-	-	-	-	-	65,0
132	-	-	-	-	-	59,5

For explanations see page 62 · Bemerkungen siehe Seite 62 · Pour plus de détails, voir page 62 · Per spiegazioni vedere a pagina 62 · Véase p. 62 para más información · Para explicações, ver página 62 · Объяснения см. на стр. 62

SWSL S1 / SFSL S1

295 t + 60 t ZB | 19-30 m | 10,50 m | 9.8 m/s | 360° | ISO

72 m + 84 m

	SWSL					SFSL
	0 t	0 t - 800 t				
	85°	85°	75°	65°	55°	15°
m	t	t	t	t	t	t
34	-	212,0*	-	-	-	-
38	-	205,0*	-	-	-	-
42	100,0	216,0	-	-	-	217,0
46	89,0	213,0	-	-	-	217,0
50	79,0	210,0	-	-	-	217,0
54	70,5	205,0	-	-	-	217,0
58	63,0	192,0	-	-	-	215,0
62	56,0	179,0	-	-	-	213,0
66	50,0	165,0	209,0	-	-	210,5
70	45,0	153,0	209,0	-	-	206,5
74	40,0	143,0	209,0	-	-	202,0
78	35,0	133,0	189,0	-	-	197,5
82	30,5	123,0	172,0	-	-	193,0
86	26,5	113,5	157,0	-	-	188,5
88	24,5	109,0	150,0	-	-	186,0
90	-	-	143,0	184,0	-	184,0
94	-	-	132,0	172,0	-	175,0
98	-	-	121,0	157,0	-	160,5
102	-	-	112,0	143,0	-	146,0
106	-	-	-	132,0	-	135,0
110	-	-	-	121,0	-	125,5
111	-	-	-	118,5	125,0	123,2
114	-	-	-	112,0	120,0	115,5
118	-	-	-	-	114,0	104,7
122	-	-	-	-	108,0	94,5
124	-	-	-	-	106,0	89,5
126	-	-	-	-	-	84,5
130	-	-	-	-	-	74,5
134	-	-	-	-	-	64,7
138	-	-	-	-	-	55,5
142	-	-	-	-	-	46,2
144	-	-	-	-	-	41,5

72 m + 96 m

	SWSL					SFSL
	0 t	0 t - 800 t				
	85°	85°	75°	65°	55°	15°
m	t	t	t	t	t	t
36	-	168,0*	-	-	-	-
38	-	168,0*	-	-	-	-
42	-	165,0*	-	-	-	-
46	81,0	171,0	-	-	-	171,0
50	71,5	169,0	-	-	-	171,0
54	63,0	167,0	-	-	-	170,0
58	56,0	164,0	-	-	-	170,0
62	49,5	157,0	-	-	-	168,5
66	43,5	149,0	-	-	-	166,0
70	38,5	140,0	-	-	-	163,5
72	36,0	136,0	161,0	-	-	162,0
74	34,0	132,0	161,0	-	-	160,5
78	29,5	123,0	161,0	-	-	157,5
82	25,2	115,0	161,0	-	-	154,5
84	23,0	111,0	159,0	-	-	153,0
86	-	107,0	152,0	-	-	151,5
90	-	99,0	139,0	-	-	148,5
94	-	91,0	127,0	-	-	145,5
98	-	83,0	117,0	140,0	-	142,5
100	-	79,0	112,0	140,0	-	141,0
102	-	-	107,0	139,0	-	139,5
106	-	-	99,0	127,0	-	133,5
110	-	-	91,5	117,0	-	124,5
112	-	-	88,0	112,0	-	120,0
114	-	-	-	107,0	-	116,0
118	-	-	-	99,0	-	107,5
120	-	-	-	95,0	104,0	103,0
122	-	-	-	91,5	101,0	98,2
124	-	-	-	88,0	99,0	93,5
126	-	-	-	-	96,0	88,7
130	-	-	-	-	91,0	79,5
134	-	-	-	-	86,5	70,7
136	-	-	-	-	84,5	66,5
138	-	-	-	-	-	62,2
142	-	-	-	-	-	54,0
146	-	-	-	-	-	46,0
150	-	-	-	-	-	38,0
152	-	-	-	-	-	34,0

* Main boom angle 88° · Hauptauslegerwinkel 88° · Jarret de flèche principale 88° · Inclinazione braccio base 88° · Ángulo de pluma principal 88° · Ângulo da lança principal 88° · Угол подъема гл. стрелы 88°

Main boom angle 88°, 85°, 75°, 65° and 55°, capacities for intermediate boom positions are calculated by the crane control system IC-1
Hauptauslegerwinkel 88°, 85°, 75°, 65° und 55°, Traglasten für Zwischenstellungen des Hauptauslegers werden von der Kransteuerung IC-1 berechnet
Jarret de flèche principale 88°, 85°, 75°, 65° et 55°, le système de commande de la grue IC-1 calcule les charges pour les positions intermédiaires de la flèche
Inclinazione braccio base 88°, 85°, 75°, 65° e 55°, capacità per posizioni intermedie del braccio sono calcolate dal sistema di controllo della gru IC-1
Ángulo de pluma principal 88°, 85°, 75°, 65° y 55° las capacidades para posiciones de pluma intermedias son calculadas por el sistema de control de grúa IC-1
Ângulos da lança principal 88°, 85°, 75°, 65° e 55°; as capacidades para posições da lança intermediária são calculadas pelo sistema de controle da grua IC-1
Грузоподъемность при углах подъема главной стрелы 88°, 85°, 75°, 65° и 55°, грузоподъемность в промежуточных положениях стрелы расчитывается системой управления краном IC-1

SWSL S1 / SFSL S1

295 t + 60 t ZB | 19-30 m | 10,50 m | 9.8 m/s | 360° | ISO

72 m + 108 m

	SWSL					SFSL
	0 t	0 t - 800 t				
	85°	85°	75°	65°	55°	15°
m	t	t	t	t	t	t
40	-	131,0*	-	-	-	-
42	-	131,0*	-	-	-	-
46	-	128,0*	-	-	-	-
50	64,0	131,0	-	-	-	132,0
54	56,0	130,0	-	-	-	131,0
58	49,0	128,0	-	-	-	129,0
62	43,0	126,0	-	-	-	128,0
66	37,5	123,0	-	-	-	126,0
70	32,5	118,0	-	-	-	124,0
74	28,0	113,0	-	-	-	122,0
78	23,5	108,0	119,0	-	-	120,0
80	22,0	106,0	119,0	-	-	119,0
82	-	103,5	118,0	-	-	117,5
86	-	98,2	118,0	-	-	114,5
90	-	92,0	117,0	-	-	112,0
94	-	85,0	116,0	-	-	109,5
98	-	77,7	114,0	-	-	107,0
102	-	71,0	105,0	-	-	104,5
106	-	64,0	97,0	101,0	-	102,0
110	-	57,2	89,0	101,0	-	99,7
112	-	54,0	85,5	101,0	-	98,5
114	-	-	82,0	101,0	-	97,2
118	-	-	75,5	96,5	-	94,7
122	-	-	69,5	89,0	-	92,0
124	-	-	67,0	85,5	-	90,5
126	-	-	-	82,0	-	88,2
130	-	-	-	75,5	86,5	83,2
134	-	-	-	69,5	81,5	76,2
136	-	-	-	67,0	79,5	72,0
138	-	-	-	-	77,0	68,0
142	-	-	-	-	73,0	60,2
146	-	-	-	-	68,5	52,7
148	-	-	-	-	66,0	49,0
150	-	-	-	-	-	45,2
154	-	-	-	-	-	38,0
158	-	-	-	-	-	31,0
162	-	-	-	-	-	23,7
164	-	-	-	-	-	20,0

* Main boom angle 88° · Hauptauslegerwinkel 88° · Jarret de flèche principale 88° · Inclinazione braccio base 88° · Ángulo de pluma principal 88° · Ângulo da lança principal 88° · Угол подъема гл. стрелы 88°

Main boom angle 88°, 85°, 75°, 65° and 55°, capacities for intermediate boom positions are calculated by the crane control system IC-1

Hauptauslegerwinkel 88°, 85°, 75°, 65° und 55°, Traglasten für Zwischenstellungen des Hauptauslegers werden von der Kransteuerung IC-1 berechnet

Jarret de flèche principale 88°, 85°, 75°, 65° et 55°, le système de commande de la grue IC-1 calcule les charges pour les positions intermédiaires de la flèche

Inclinazione braccio base 88°, 85°, 75°, 65° e 55°, capacità per posizioni intermedie del braccio sono calcolate dal sistema di controllo della gru IC-1

Ángulo de pluma principal 88°, 85°, 75°, 65° y 55° las capacidades para posiciones de pluma intermedias son calculadas por el sistema de control de grúa IC-1

Ângulos da lança principal 88°, 85°, 75°, 65° e 55°; as capacidades para posições da lança intermediária são calculadas pelo sistema de controle da grua IC-1

Грузоподъемность при углах подъема главной стрелы 88°, 85°, 75°, 65° и 55°, грузоподъемность в промежуточных положениях стрелы расчитывается системой управления краном IC-1

78 m + 36 m

	SWSL					SFSL
	0 t	0 t - 800 t				
	85°	85°	75°	65°	55°	15°
m	t	t	t	t	t	t
20	-	480,0*	-	-	-	-
22	-	455,0*	-	-	-	-
24	-	426,0*	-	-	-	-
26	220,0	504,0	-	-	-	509,0
28	204,0	489,0	-	-	-	509,0
30	190,0	464,0	-	-	-	509,0
34	167,0	415,0	-	-	-	509,0
38	148,0	371,0	-	-	-	508,0
42	131,0	336,0	-	-	-	506,0
44	122,0	318,0	509,0	-	-	506,0
46	-	-	502,0	-	-	493,0
50	-	-	423,0	-	-	460,0
54	-	-	360,0	-	-	411,0
58	-	-	312,0	-	-	369,0
61	-	-	-	341,0	-	341,2
62	-	-	-	334,0	-	332,5
66	-	-	-	310,0	-	299,5
70	-	-	-	288,0	-	270,0
71	-	-	-	283,0	-	263,0
74	-	-	-	-	-	244,0
77	-	-	-	-	227,0	226,2
78	-	-	-	-	223,0	220,5
82	-	-	-	-	209,0	199,5
86	-	-	-	-	-	184,0
90	-	-	-	-	-	166,5
94	-	-	-	-	-	148,0
98	-	-	-	-	-	130,5
100	-	-	-	-	-	122,0

78 m + 48 m

m	t	t	t	t	t	t
22	-	390,0*	-	-	-	-
24	-	381,0*	-	-	-	-
26	-	363,0*	-	-	-	-
28	-	344,0*	-	-	-	-
30	177,0	402,0	-	-	-	404,0
34	155,0	382,0	-	-	-	404,0
38	137,0	351,0	-	-	-	404,0
42	123,0	317,0	-	-	-	404,0
46	110,0	287,0	-	-	-	404,0
50	98,0	264,0	409,0	-	-	404,0
54	87,0	241,0	388,0	-	-	383,0
56	82,0	230,0	361,0	-	-	375,0
58	-	-	336,0	-	-	366,0
62	-	-	295,0	-	-	341,0
66	-	-	262,0	-	-	309,5
68	-	-	248,0	-	-	294,0
69	-	-	-	288,0	-	287,2
70	-	-	-	283,0	-	280,5
74	-	-	-	264,0	-	254,5
78	-	-	-	247,0	-	230,5
82	-	-	-	232,0	-	209,5
86	-	-	-	-	-	190,5
87	-	-	-	-	188,0	185,7
90	-	-	-	-	179,0	172,5
94	-	-	-	-	170,0	160,0
98	-	-	-	-	-	146,0
102	-	-	-	-	-	130,5
106	-	-	-	-	-	116,0
110	-	-	-	-	-	102,0
112	-	-	-	-	-	95,0

SWSL S1 / SFSL S1

295 t + 60 t ZB | 19-30 m | 10,50 m | 9.8 m/s | 360° | ISO

78 m + 60 m

	SWSL					SFSL
	0 t	0 t - 800 t				
	85°	85°	75°	65°	55°	15°
m	t	t	t	t	t	t
26	-	311,0*	-	-	-	-
28	-	305,0*	-	-	-	-
30	-	294,0*	-	-	-	-
34	145,0	323,0	-	-	-	323,0
38	128,0	314,0	-	-	-	323,0
42	114,0	296,0	-	-	-	323,0
46	102,0	272,0	-	-	-	323,0
50	92,0	249,0	-	-	-	323,0
54	83,0	227,0	-	-	-	323,0
56	79,0	219,0	324,0	-	-	323,0
58	75,5	211,0	324,0	-	-	320,0
62	67,0	195,0	308,0	-	-	305,0
66	59,5	179,0	273,0	-	-	293,0
70	-	-	244,0	-	-	281,0
74	-	-	220,0	-	-	263,5
77	-	-	205,0	247,0	-	246,5
78	-	-	200,0	243,0	-	241,0
80	-	-	191,0	236,0	-	230,0
82	-	-	-	228,0	-	219,5
86	-	-	-	214,0	-	200,0
90	-	-	-	202,0	-	183,0
94	-	-	-	187,0	-	167,0
96	-	-	-	-	160,0	159,0
98	-	-	-	-	156,0	151,5
102	-	-	-	-	147,0	141,0
105	-	-	-	-	142,0	132,5
106	-	-	-	-	-	129,0
110	-	-	-	-	-	116,0
114	-	-	-	-	-	103,7
118	-	-	-	-	-	91,5
122	-	-	-	-	-	79,7
124	-	-	-	-	-	74,0

78 m + 72 m

	SWSL					SFSL
	0 t	0 t - 800 t				
	85°	85°	75°	65°	55°	15°
m	t	t	t	t	t	t
30	-	249,0*	-	-	-	-
34	-	240,0*	-	-	-	-
38	118,0	258,0	-	-	-	259,0
42	104,0	254,0	-	-	-	259,0
46	93,0	246,0	-	-	-	259,0
50	83,0	233,0	-	-	-	259,0
54	74,5	215,0	-	-	-	258,0
58	67,0	198,0	-	-	-	257,0
62	60,5	181,0	254,0	-	-	254,0
66	54,5	169,0	254,0	-	-	248,5
70	48,5	157,0	249,0	-	-	240,5
74	43,0	145,0	224,0	-	-	233,0
78	38,0	133,0	203,0	-	-	225,5
82	-	-	185,0	-	-	218,0
86	-	-	169,0	208,0	-	205,0
90	-	-	154,0	195,0	-	187,5
92	-	-	143,0	190,0	-	179,0
94	-	-	-	184,0	-	171,0
98	-	-	-	173,0	-	156,5
102	-	-	-	159,0	-	143,0
104	-	-	-	153,0	-	136,0
105	-	-	-	-	135,0	133,5
106	-	-	-	-	133,0	131,0
110	-	-	-	-	127,0	121,5
114	-	-	-	-	121,0	111,0
117	-	-	-	-	117,0	102,3
118	-	-	-	-	-	99,7
122	-	-	-	-	-	89,2
126	-	-	-	-	-	79,0
130	-	-	-	-	-	68,7
134	-	-	-	-	-	58,5
136	-	-	-	-	-	53,5

* Main boom angle 88° · Hauptauslegerwinkel 88° · Jarret de flèche principale 88° · Inclinazione braccio base 88° · Ángulo de pluma principal 88° · Ângulo da lança principal 88° · Угол подъема гл. стрелы 88°

Main boom angle 88°, 85°, 75°, 65° and 55°, capacities for intermediate boom positions are calculated by the crane control system IC-1
Hauptauslegerwinkel 88°, 85°, 75°, 65° und 55°, Traglasten für Zwischenstellungen des Hauptauslegers werden von der Kransteuerung IC-1 berechnet
Jarret de flèche principale 88°, 85°, 75°, 65° et 55°, le système de commande de la grue IC-1 calcule les charges pour les positions intermédiaires de la flèche
Inclinazione braccio base 88°, 85°, 75°, 65° e 55°, capacità per posizioni intermedie del braccio sono calcolate dal sistema di controllo della gru IC-1
Ángulo de pluma principal 88°, 85°, 75°, 65° y 55° las capacidades para posiciones de pluma intermedias son calculadas por el sistema de control de grúa IC-1
Ângulos da lança principal 88°, 85°, 75°, 65° e 55°; as capacidades para posições da lança intermediária são calculadas pelo sistema de controle da grua IC-1
Грузоподъемность при углах подъема главной стрелы 88°, 85°, 75°, 65° и 55°, грузоподъемность в промежуточных положениях стрелы расчитывается системой управления краном IC-1

SWSL S1 / SFSL S1

CC 9800

295 t + 60 t ZB | 19-30 m | 10,50 m | 9.8 m/s | 360° | ISO

78 m + 84 m

	SWSL					SFSL
	0 t	0 t - 800 t				
	85°	85°	75°	65°	55°	15°
m	t	t	t	t	t	t
34	-	202,0*	-	-	-	-
38	-	195,0*	-	-	-	-
42	95,0	207,0	-	-	-	207,0
46	84,0	204,0	-	-	-	207,0
50	74,5	201,0	-	-	-	207,0
54	66,5	197,0	-	-	-	207,0
58	59,0	184,0	-	-	-	206,0
62	53,0	171,0	-	-	-	204,0
66	47,0	157,0	-	-	-	202,0
68	44,5	151,0	198,0	-	-	201,0
70	42,0	145,0	198,0	-	-	198,5
74	37,5	135,0	198,0	-	-	194,0
78	33,0	126,0	198,0	-	-	190,0
82	29,0	116,0	183,0	-	-	185,5
86	25,0	106,5	167,0	-	-	181,0
88	23,0	102,0	160,0	-	-	179,0
90	-	-	153,0	-	-	177,0
92	-	-	147,0	175,0	-	175,0
94	-	-	141,0	175,0	-	171,5
98	-	-	130,0	168,0	-	161,0
102	-	-	117,0	156,0	-	147,0
104	-	-	109,0	150,0	-	140,0
106	-	-	-	144,0	-	134,5
110	-	-	-	132,0	-	123,0
114	-	-	-	123,0	114,0	113,0
116	-	-	-	118,0	111,0	109,0
118	-	-	-	-	109,0	104,5
122	-	-	-	-	103,0	95,2
126	-	-	-	-	99,0	85,7
128	-	-	-	-	97,0	81,0
130	-	-	-	-	-	76,2
134	-	-	-	-	-	67,0
138	-	-	-	-	-	58,2
142	-	-	-	-	-	49,5
146	-	-	-	-	-	40,7
148	-	-	-	-	-	36,5

78 m + 96 m

	SWSL					SFSL
	0 t	0 t - 800 t				
	85°	85°	75°	65°	55°	15°
m	t	t	t	t	t	t
36	-	161,0*	-	-	-	-
38	-	161,0*	-	-	-	-
42	-	158,0*	-	-	-	-
46	76,5	164,0	-	-	-	164,0
50	67,0	162,0	-	-	-	163,0
54	59,0	160,0	-	-	-	163,0
58	52,5	157,0	-	-	-	162,0
62	46,0	151,0	-	-	-	161,0
66	40,5	142,0	-	-	-	159,0
70	35,5	134,0	-	-	-	157,0
74	31,0	125,0	154,0	-	-	154,5
78	27,0	116,0	154,0	-	-	152,0
82	23,2	108,0	154,0	-	-	149,5
84	21,5	104,0	154,0	-	-	148,0
86	-	100,5	154,0	-	-	146,5
90	-	93,0	149,0	-	-	143,5
94	-	85,2	137,0	-	-	140,5
98	-	77,5	125,0	-	-	137,5
100	-	73,5	120,0	131,0	-	136,0
102	-	-	116,0	131,0	-	134,5
106	-	-	107,0	131,0	-	130,5
110	-	-	99,0	128,0	-	124,0
114	-	-	88,5	118,0	-	113,5
118	-	-	-	109,0	-	104,0
122	-	-	-	101,0	-	96,5
124	-	-	-	97,0	94,5	93,0
126	-	-	-	93,5	92,0	88,7
128	-	-	-	90,0	90,0	84,5
130	-	-	-	-	87,5	80,2
134	-	-	-	-	83,0	71,7
138	-	-	-	-	79,0	63,5
140	-	-	-	-	77,0	59,5
142	-	-	-	-	-	55,5
146	-	-	-	-	-	47,5
150	-	-	-	-	-	39,7
154	-	-	-	-	-	32,2
158	-	-	-	-	-	24,7
160	-	-	-	-	-	21,0

* Main boom angle 88° · Hauptauslegerwinkel 88° · Jarret de flèche principale 88° · Inclinazione braccio base 88° · Ángulo de pluma principal 88° · Ângulo da lança principal 88° · Угол подъема гл. стрелы 88°

Main boom angle 88°, 85°, 75°, 65° and 55°, capacities for intermediate boom positions are calculated by the crane control system IC-1
Hauptauslegerwinkel 88°, 85°, 75°, 65° und 55°, Traglasten für Zwischenstellungen des Hauptauslegers werden von der Kransteuerung IC-1 berechnet
Jarret de flèche principale 88°, 85°, 75°, 65° et 55°, le système de commande de la grue IC-1 calcule les charges pour les positions intermédiaires de la flèche
Inclinazione braccio base 88°, 85°, 75°, 65° e 55°, capacità per posizioni intermedie del braccio sono calcolate dal sistema di controllo della gru IC-1
Ángulo de pluma principal 88°, 85°, 75°, 65° y 55° las capacidades para posiciones de pluma intermedias son calculadas por el sistema de control de grúa IC-1
Ângulos da lança principal 88°, 85°, 75°, 65° e 55°; as capacidades para posições da lança intermediária são calculadas pelo sistema de controle da grua IC-1
Грузоподъемность при углах подъема главной стрелы 88°, 85°, 75°, 65° и 55°, грузоподъемность в промежуточных положениях стрелы расчитывается системой управления краном IC-1

SWSL S1 / SFSL S1

295 t + 60 t ZB | 19-30 m | 10,50 m | 9.8 m/s | 360° | ISO

78 m + 108 m

	SWSL					SFSL
	0 t	0 t - 800 t				
	85°	85°	75°	65°	55°	15°
m	t	t	t	t	t	t
40	-	125,0*	-	-	-	-
42	-	125,0*	-	-	-	-
46	-	123,0*	-	-	-	-
50	60,0	126,0	-	-	-	126,0
54	52,5	125,0	-	-	-	126,0
58	45,5	124,0	-	-	-	125,0
62	39,5	122,0	-	-	-	123,5
66	34,0	120,0	-	-	-	122,5
70	29,5	114,0	-	-	-	120,5
74	25,0	109,0	-	-	-	118,0
78	21,0	103,0	-	-	-	116,0
80	-	100,0	114,0	-	-	115,0
82	-	97,5	114,0	-	-	114,0
86	-	92,2	114,0	-	-	111,5
90	-	86,0	114,0	-	-	109,0
94	-	79,2	113,0	-	-	106,5
98	-	72,5	111,0	-	-	104,0
102	-	65,7	110,0	-	-	102,0
106	-	59,2	105,0	-	-	99,7
108	-	56,0	100,0	97,5	-	98,5
110	-	52,5	96,5	97,5	-	97,2
112	-	49,0	93,0	97,5	-	96,0
114	-	-	89,0	97,5	-	94,7
118	-	-	82,5	97,5	-	92,2
122	-	-	76,0	97,5	-	90,0
126	-	-	67,0	91,0	-	86,7
130	-	-	-	84,0	-	82,5
134	-	-	-	77,5	78,0	76,0
138	-	-	-	72,0	74,0	68,2
142	-	-	-	-	69,5	60,7
146	-	-	-	-	66,0	53,2
150	-	-	-	-	62,5	46,0
154	-	-	-	-	-	39,0
158	-	-	-	-	-	32,2
162	-	-	-	-	-	25,5
164	-	-	-	-	-	22,0

84 m + 36 m

	SWSL					SFSL
	0 t	0 t - 800 t				
	85°	85°	75°	65°	55°	15°
m	t	t	t	t	t	t
20	-	455,0*	-	-	-	-
22	-	435,0*	-	-	-	-
24	-	408,0*	-	-	-	-
26	211,0	480,0	-	-	-	482,0
28	196,0	466,0	-	-	-	482,0
30	182,0	445,0	-	-	-	482,0
34	160,0	400,0	-	-	-	482,0
38	142,0	357,0	-	-	-	481,0
42	127,0	324,0	-	-	-	480,0
44	120,0	307,0	-	-	-	478,0
45	-	-	479,0	-	-	477,5
46	-	-	479,0	-	-	477,0
50	-	-	453,0	-	-	452,0
54	-	-	382,0	-	-	408,0
58	-	-	328,0	-	-	367,0
62	-	-	-	-	-	331,0
64	-	-	-	316,0	-	314,0
66	-	-	-	304,0	-	299,0
70	-	-	-	283,0	-	270,5
73	-	-	-	268,0	-	251,2
74	-	-	-	-	-	245,5
78	-	-	-	-	-	222,5
81	-	-	-	-	207,0	205,7
82	-	-	-	-	204,0	200,5
86	-	-	-	-	192,0	180,0
90	-	-	-	-	-	165,5
94	-	-	-	-	-	151,0
98	-	-	-	-	-	135,0
102	-	-	-	-	-	119,0
106	-	-	-	-	-	103,7
108	-	-	-	-	-	96,5

* Main boom angle 88° · Hauptauslegerwinkel 88° · Jarret de flèche principale 88° · Inclinazione braccio base 88° · Ángulo de pluma principal 88° · Ângulo da lança pGrincipal 88° · Угол подъема гл. стрелы 88°

Main boom angle 88°, 85°, 75°, 65° and 55°, capacities for intermediate boom positions are calculated by the crane control system IC-1
Hauptauslegerwinkel 88°, 85°, 75°, 65° und 55°, Traglasten für Zwischenstellungen des Hauptauslegers werden von der Kransteuerung IC-1 berechnet
Jarret de flèche principale 88°, 85°, 75°, 65° et 55°, le système de commande de la grue IC-1 calcule les charges pour les positions intermédiaires de la flèche
Inclinazione braccio base 88°, 85°, 75°, 65° e 55°, capacità per posizioni intermedie del braccio sono calcolate dal sistema di controllo della gru IC-1
Ángulo de pluma principal 88°, 85°, 75°, 65° y 55° las capacidades para posiciones de pluma intermedias son calculadas por el sistema de control de grúa IC-1
Ângulos da lança principal 88°, 85°, 75°, 65° e 55°; as capacidades para posições da lança intermediária são calculadas pelo sistema de controle da grua IC-1
Грузоподъемность при углах подъема главной стрелы 88°, 85°, 75°, 65° и 55°, грузоподъемность в промежуточных положениях стрелы расчитывается системой управления краном IC-1

SWSL S1 / SFSL S1

295 t + 60 t ZB | 19-30 m | 10,50 m | 9.8 m/s | 360° | ISO

84 m + 48 m

	SWSL					SFSL
	0 t	0 t - 800 t				
	85°	85°	75°	65°	55°	15°
m	t	t	t	t	t	t
24	-	362,0*	-	-	-	-
26	-	347,0*	-	-	-	-
28	-	330,0*	-	-	-	-
30	170,0	380,0	-	-	-	383,0
34	149,0	367,0	-	-	-	383,0
38	132,0	337,0	-	-	-	383,0
42	117,0	306,0	-	-	-	383,0
46	105,0	275,0	-	-	-	383,0
50	95,0	254,0	-	-	-	383,0
52	90,5	243,0	384,0	-	-	383,0
54	85,0	232,0	380,0	-	-	372,0
56	80,0	221,0	378,0	-	-	363,0
58	-	-	354,0	-	-	355,0
62	-	-	309,0	-	-	334,5
66	-	-	273,0	-	-	307,5
70	-	-	244,0	-	-	279,5
72	-	-	-	267,0	-	266,0
74	-	-	-	258,0	-	254,0
78	-	-	-	242,0	-	230,5
82	-	-	-	227,0	-	209,0
84	-	-	-	220,0	-	199,0
86	-	-	-	-	-	190,5
90	-	-	-	-	175,0	173,5
94	-	-	-	-	165,0	156,5
97	-	-	-	-	158,0	146,2
98	-	-	-	-	-	143,5
102	-	-	-	-	-	131,5
106	-	-	-	-	-	118,5
110	-	-	-	-	-	105,5
114	-	-	-	-	-	92,5
118	-	-	-	-	-	79,7
120	-	-	-	-	-	73,5

84 m + 60 m

	SWSL					SFSL
	0 t	0 t - 800 t				
	85°	85°	75°	65°	55°	15°
m	t	t	t	t	t	t
26	-	297,0*	-	-	-	-
28	-	292,0*	-	-	-	-
30	-	281,0*	-	-	-	-
34	139,0	306,0	-	-	-	308,0
38	122,0	300,0	-	-	-	308,0
42	109,0	284,0	-	-	-	308,0
46	97,5	262,0	-	-	-	308,0
50	87,5	240,0	-	-	-	307,0
54	79,0	218,0	-	-	-	306,0
58	71,5	202,0	304,0	-	-	305,0
62	65,0	187,0	303,0	-	-	295,0
66	58,0	172,0	285,0	-	-	282,5
68	54,5	164,0	269,0	-	-	277,0
70	-	-	254,0	-	-	271,5
74	-	-	228,0	-	-	258,0
78	-	-	207,0	-	-	239,5
79	-	-	202,0	234,0	-	234,2
82	-	-	189,0	223,0	-	219,0
86	-	-	-	210,0	-	199,5
90	-	-	-	198,0	-	182,0
94	-	-	-	187,0	-	166,5
96	-	-	-	181,0	-	159,0
98	-	-	-	-	-	151,5
99	-	-	-	-	149,0	147,7
102	-	-	-	-	143,0	137,0
106	-	-	-	-	135,0	126,5
109	-	-	-	-	130,0	119,2
110	-	-	-	-	-	116,5
114	-	-	-	-	-	105,2
118	-	-	-	-	-	93,7
122	-	-	-	-	-	82,5
126	-	-	-	-	-	71,7
128	-	-	-	-	-	66,5

* Main boom angle 88° · Hauptauslegerwinkel 88° · Jarret de flèche principale 88° · Inclinazione braccio base 88° · Ángulo de pluma principal 88° · Ângulo da lança principal 88° · Угол подъема гл. стрелы 88°

Main boom angle 88°, 85°, 75°, 65° and 55°, capacities for intermediate boom positions are calculated by the crane control system IC-1
Hauptauslegerwinkel 88°, 85°, 75°, 65° und 55°, Traglasten für Zwischenstellungen des Hauptauslegers werden von der Kransteuerung IC-1 berechnet
Jarret de flèche principale 88°, 85°, 75°, 65° et 55°, le système de commande de la grue IC-1 calcule les charges pour les positions intermédiaires de la flèche
Inclinazione braccio base 88°, 85°, 75°, 65° e 55°, capacità per posizioni intermedie del braccio sono calcolate dal sistema di controllo della gru IC-1
Ángulo de pluma principal 88°, 85°, 75°, 65° y 55° las capacidades para posiciones de pluma intermedias son calculadas por el sistema de control de grúa IC-1
Ângulos da lança principal 88°, 85°, 75°, 65° e 55°; as capacidades para posições da lança intermediária são calculadas pelo sistema de controle da grua IC-1
Грузоподъемность при углах подъема главной стрелы 88°, 85°, 75°, 65° и 55°, грузоподъемность в промежуточных положениях стрелы расчитывается системой управления краном IC-1

SWSL S1 / SFSL S1

295 t + 60 t ZB | 19-30 m | 10,50 m | 9.8 m/s | 360° | ISO

84 m + 72 m

	SWSL					SFSL
	0 t	0 t - 800 t				
	85°	85°	75°	65°	55°	15°
m	t	t	t	t	t	t
30	-	238,0*	-	-	-	-
34	-	229,0*	-	-	-	-
38	112,0	247,0	-	-	-	247,0
42	99,5	243,0	-	-	-	247,0
46	88,5	235,0	-	-	-	247,0
50	79,0	223,0	-	-	-	247,0
54	70,5	207,0	-	-	-	246,0
58	63,5	190,0	-	-	-	244,0
62	57,0	174,0	-	-	-	242,0
64	54,0	168,0	240,0	-	-	241,0
66	51,5	162,0	240,0	-	-	237,5
70	46,0	150,0	240,0	-	-	230,0
74	41,0	139,0	233,0	-	-	223,5
78	36,5	127,0	210,0	-	-	216,5
82	-	-	191,0	-	-	210,0
86	-	-	175,0	-	-	201,0
88	-	-	167,0	196,0	-	195,0
90	-	-	160,0	191,0	-	186,5
94	-	-	141,0	180,0	-	170,5
98	-	-	-	170,0	-	155,5
102	-	-	-	160,0	-	142,0
106	-	-	-	152,0	-	130,0
108	-	-	-	-	124,0	124,0
110	-	-	-	-	121,0	118,0
114	-	-	-	-	114,0	109,0
118	-	-	-	-	109,0	100,0
120	-	-	-	-	106,0	95,0
122	-	-	-	-	-	90,0
126	-	-	-	-	-	80,0
130	-	-	-	-	-	70,2
134	-	-	-	-	-	60,7
138	-	-	-	-	-	51,5
140	-	-	-	-	-	47,0

84 m + 84 m

	SWSL					SFSL
	0 t	0 t - 800 t				
	85°	85°	75°	65°	55°	15°
m	t	t	t	t	t	t
34	-	192,0*	-	-	-	-
38	-	187,0*	-	-	-	-
42	90,0	197,0	-	-	-	198,0
46	79,5	195,0	-	-	-	198,0
50	70,5	192,0	-	-	-	197,0
54	62,5	188,0	-	-	-	197,0
58	55,5	177,0	-	-	-	196,0
62	49,5	164,0	-	-	-	194,0
66	44,0	151,0	-	-	-	191,5
70	39,0	139,0	188,0	-	-	188,5
74	34,5	129,0	188,0	-	-	185,0
78	30,5	120,0	188,0	-	-	180,5
82	26,7	111,0	187,0	-	-	176,0
86	23,2	101,7	173,0	-	-	171,5
88	21,5	97,5	165,0	-	-	169,0
90	-	-	158,0	-	-	167,0
94	-	-	145,0	-	-	163,0
96	-	-	139,0	165,0	-	161,0
98	-	-	134,0	164,0	-	157,0
102	-	-	123,0	154,0	-	146,0
104	-	-	116,0	150,0	-	139,0
106	-	-	-	146,0	-	133,0
110	-	-	-	138,0	-	122,0
114	-	-	-	128,0	-	111,5
118	-	-	-	119,0	102,0	101,0
122	-	-	-	-	97,5	93,5
126	-	-	-	-	93,0	85,5
130	-	-	-	-	88,5	76,5
132	-	-	-	-	87,0	72,0
134	-	-	-	-	-	67,5
138	-	-	-	-	-	59,0
142	-	-	-	-	-	50,7
146	-	-	-	-	-	42,5
150	-	-	-	-	-	34,5
152	-	-	-	-	-	30,5

* Main boom angle 88° · Hauptauslegerwinkel 88° · Jarret de flèche principale 88° · Inclinazione braccio base 88° · Ángulo de pluma principal 88° · Ângulo da lança principal 88° · Угол подъема гл. стрелы 88°

Main boom angle 88°, 85°, 75°, 65° and 55°, capacities for intermediate boom positions are calculated by the crane control system IC-1
Hauptauslegerwinkel 88°, 85°, 75°, 65° und 55°, Traglasten für Zwischenstellungen des Hauptauslegers werden von der Kransteuerung IC-1 berechnet
Jarret de flèche principale 88°, 85°, 75°, 65° et 55°, le système de commande de la grue IC-1 calcule les charges pour les positions intermédiaires de la flèche
Inclinazione braccio base 88°, 85°, 75°, 65° e 55°, capacità per posizioni intermedie del braccio sono calcolate dal sistema di controllo della gru IC-1
Ángulo de pluma principal 88°, 85°, 75°, 65° y 55° las capacidades para posiciones de pluma intermedias son calculadas por el sistema de control de grúa IC-1
Ângulos da lança principal 88°, 85°, 75°, 65° e 55°; as capacidades para posições da lança intermediária são calculadas pelo sistema de controle da grua IC-1
Грузоподъемность при углах подъема главной стрелы 88°, 85°, 75°, 65° и 55°, грузоподъемность в промежуточных положениях стрелы расчитывается системой управления краном IC-1

SWSL S1 / SFSL S1

CC 9800

295 t + 60 t ZB | 19-30 m | 10,50 m | 9.8 m/s | 360° | ISO

84 m + 96 m

	SWSL					SFSL
	0 t	0 t - 800 t				
	85°	85°	75°	65°	55°	15°
m	t	t	t	t	t	t
38	-	154,0*	-	-	-	-
42	-	151,0*	-	-	-	-
46	71,5	157,0	-	-	-	157,0
50	63,0	156,0	-	-	-	157,0
54	55,5	153,0	-	-	-	156,0
58	48,5	151,0	-	-	-	155,0
62	42,5	146,0	-	-	-	154,5
66	37,5	137,0	-	-	-	152,5
70	32,5	128,0	-	-	-	150,0
74	28,0	120,0	-	-	-	148,0
76	26,0	115,0	146,0	-	-	147,0
78	24,0	111,0	146,0	-	-	145,5
80	22,5	107,0	146,0	-	-	144,0
82	-	103,2	146,0	-	-	142,5
86	-	95,7	146,0	-	-	140,0
90	-	88,2	146,0	-	-	137,5
94	-	80,7	141,0	-	-	134,5
98	-	73,2	129,0	-	-	131,5
100	-	69,5	124,0	-	-	130,0
102	-	-	119,0	-	-	129,0
104	-	-	114,0	125,0	-	128,0
106	-	-	110,0	125,0	-	126,5
110	-	-	101,0	125,0	-	121,5
114	-	-	93,0	124,0	-	112,5
116	-	-	87,0	119,0	-	107,0
118	-	-	-	114,0	-	102,7
122	-	-	-	105,0	-	93,5
126	-	-	-	98,0	-	85,2
128	-	-	-	94,5	83,5	82,0
130	-	-	-	91,0	81,5	78,5
134	-	-	-	-	77,5	71,0
138	-	-	-	-	74,0	63,0
142	-	-	-	-	70,5	55,2
146	-	-	-	-	-	47,7
150	-	-	-	-	-	40,5
154	-	-	-	-	-	33,2
158	-	-	-	-	-	26,0
160	-	-	-	-	-	22,5

84 m + 108 m

	SWSL					SFSL
	0 t	0 t - 800 t				
	85°	85°	75°	65°	55°	15°
m	t	t	t	t	t	t
40	-	120,0*	-	-	-	-
42	-	120,0*	-	-	-	-
46	-	118,0*	-	-	-	-
50	55,5	121,0	-	-	-	121,0
54	48,5	120,0	-	-	-	121,0
58	42,0	119,0	-	-	-	120,0
62	36,0	117,0	-	-	-	118,5
66	31,0	115,0	-	-	-	117,5
70	26,5	110,0	-	-	-	116,0
74	22,0	104,0	-	-	-	114,0
76	20,0	102,0	-	-	-	113,0
78	-	99,0	-	-	-	112,0
82	-	93,2	110,0	-	-	110,0
86	-	87,5	110,0	-	-	108,0
90	-	81,2	110,0	-	-	106,0
94	-	74,7	110,0	-	-	103,5
98	-	68,2	109,0	-	-	101,0
102	-	61,7	108,0	-	-	99,0
106	-	55,2	106,0	-	-	97,0
110	-	48,7	99,5	93,0	-	94,7
112	-	45,5	95,5	93,0	-	93,5
114	-	-	92,0	93,0	-	92,2
118	-	-	85,0	93,0	-	90,0
122	-	-	78,5	93,0	-	87,7
126	-	-	71,0	93,0	-	84,5
128	-	-	66,0	92,0	-	82,5
130	-	-	-	88,5	-	79,2
134	-	-	-	81,5	-	73,0
136	-	-	-	78,5	71,0	70,0
138	-	-	-	75,5	69,0	66,5
142	-	-	-	70,0	65,5	59,5
146	-	-	-	-	61,5	52,5
150	-	-	-	-	58,5	45,5
154	-	-	-	-	55,0	38,7
158	-	-	-	-	-	32,2
162	-	-	-	-	-	25,7
164	-	-	-	-	-	22,5

* Main boom angle 88° · Hauptauslegerwinkel 88° · Jarret de flèche principale 88° · Inclinazione braccio base 88° · Ángulo de pluma principal 88° · Ângulo da lança principal 88° · Угол подъема гл. стрелы 88°

Main boom angle 88°, 85°, 75°, 65° and 55°, capacities for intermediate boom positions are calculated by the crane control system IC-1
Hauptauslegerwinkel 88°, 85°, 75°, 65° und 55°, Traglasten für Zwischenstellungen des Hauptauslegers werden von der Kransteuerung IC-1 berechnet
Jarret de flèche principale 88°, 85°, 75°, 65° et 55°, le système de commande de la grue IC-1 calcule les charges pour les positions intermédiaires de la flèche
Inclinazione braccio base 88°, 85°, 75°, 65° e 55°, capacità per posizioni intermedie del braccio sono calcolate dal sistema di controllo della gru IC-1
Ángulo de pluma principal 88°, 85°, 75°, 65° y 55° las capacidades para posiciones de pluma intermedias son calculadas por el sistema de control de grúa IC-1
Ângulos da lança principal 88°, 85°, 75°, 65° e 55°; as capacidades para posições da lança intermediária são calculadas pelo sistema de controle da grua IC-1
Грузоподъемность при углах подъема главной стрелы 88°, 85°, 75°, 65° и 55°, грузоподъемность в промежуточных положениях стрелы расчитывается системой управления краном IC-1

SWSL S1 / SFSL S1

295 t + 60 t ZB | 19-30 m | 10,50 m | 9.8 m/s | 360° | ISO

90 m + 36 m

	SWSL					SFSL
	0 t	0 t - 800 t				
	85°	85°	75°	65°	55°	15°
m	t	t	t	t	t	t
20	-	426,0*	-	-	-	-
22	-	409,0*	-	-	-	-
24	-	386,0*	-	-	-	-
26	201,0	446,0	-	-	-	453,0
28	187,0	438,0	-	-	-	453,0
30	174,0	422,0	-	-	-	453,0
34	153,0	382,0	-	-	-	453,0
38	136,0	340,0	-	-	-	452,0
42	121,0	309,0	-	-	-	449,0
44	115,0	293,0	-	-	-	448,0
46	-	-	-	-	-	448,0
47	-	-	442,0	-	-	446,0
50	-	-	438,0	-	-	433,0
54	-	-	406,0	-	-	402,0
58	-	-	346,0	-	-	362,0
60	-	-	322,0	-	-	344,0
62	-	-	-	-	-	327,5
66	-	-	-	-	-	296,0
67	-	-	-	290,0	-	288,5
70	-	-	-	275,0	-	268,0
74	-	-	-	257,0	-	242,5
76	-	-	-	248,0	-	230,0
78	-	-	-	-	-	220,0
82	-	-	-	-	-	200,0
84	-	-	-	-	191,0	190,0
86	-	-	-	-	185,0	180,5
89	-	-	-	-	177,0	166,5
90	-	-	-	-	-	162,0
94	-	-	-	-	-	148,0
98	-	-	-	-	-	135,0
102	-	-	-	-	-	121,0
106	-	-	-	-	-	107,0
110	-	-	-	-	-	93,0
112	-	-	-	-	-	86,0

90 m + 48 m

	SWSL					SFSL
	0 t	0 t - 800 t				
	85°	85°	75°	65°	55°	15°
m	t	t	t	t	t	t
24	-	341,0*	-	-	-	-
26	-	328,0*	-	-	-	-
28	-	312,0*	-	-	-	-
30	162,0	359,0	-	-	-	360,0
34	142,0	346,0	-	-	-	360,0
38	125,0	320,0	-	-	-	360,0
42	112,0	291,0	-	-	-	360,0
46	100,0	261,0	-	-	-	359,0
50	90,5	241,0	-	-	-	357,0
54	82,0	221,0	354,0	-	-	356,0
56	78,0	210,0	352,0	-	-	345,0
58	-	-	349,0	-	-	338,0
62	-	-	324,0	-	-	324,0
66	-	-	285,0	-	-	302,5
70	-	-	254,0	-	-	275,0
72	-	-	240,0	-	-	262,0
74	-	-	-	251,0	-	250,5
78	-	-	-	235,0	-	228,0
82	-	-	-	220,0	-	207,0
86	-	-	-	207,0	-	189,0
90	-	-	-	-	-	172,5
94	-	-	-	-	158,0	156,0
98	-	-	-	-	149,0	140,5
101	-	-	-	-	144,0	130,5
102	-	-	-	-	-	128,0
106	-	-	-	-	-	117,5
110	-	-	-	-	-	105,7
114	-	-	-	-	-	93,7
118	-	-	-	-	-	82,0
122	-	-	-	-	-	70,2
124	-	-	-	-	-	64,5

* Main boom angle 88° · Hauptauslegerwinkel 88° · Jarret de flèche principale 88° · Inclinazione braccio base 88° · Ángulo de pluma principal 88° · Ângulo da lança principal 88° · Угол подъема гл. стрелы 88°

Main boom angle 88°, 85°, 75°, 65° and 55°, capacities for intermediate boom positions are calculated by the crane control system IC-1
Hauptauslegerwinkel 88°, 85°, 75°, 65° und 55°, Traglasten für Zwischenstellungen des Hauptauslegers werden von der Kransteuerung IC-1 berechnet
Jarret de flèche principale 88°, 85°, 75°, 65° et 55°, le système de commande de la grue IC-1 calcule les charges pour les positions intermédiaires de la flèche
Inclinazione braccio base 88°, 85°, 75°, 65° e 55°, capacità per posizioni intermedie del braccio sono calcolate dal sistema di controllo della gru IC-1
Ángulo de pluma principal 88°, 85°, 75°, 65° y 55° las capacidades para posiciones de pluma intermedias son calculadas por el sistema de control de grúa IC-1
Ângulos da lança principal 88°, 85°, 75°, 65° e 55°; as capacidades para posições da lança intermediária são calculadas pelo sistema de controle da grua IC-1
Грузоподъемность при углах подъема главной стрелы 88°, 85°, 75°, 65° и 55°, грузоподъемность в промежуточных положениях стрелы расчитывается системой управления краном IC-1

SWSL S1 / SFSL S1

295 t + 60 t ZB | 19-30 m | 10,50 m | 9.8 m/s | 360° | ISO

90 m + 60 m

	SWSL					SFSL
	0 t	0 t - 800 t				
	85°	85°	75°	65°	55°	15°
m	t	t	t	t	t	t
26	-	281,0*	-	-	-	-
28	-	276,0*	-	-	-	-
30	-	266,0*	-	-	-	-
34	132,0	290,0	-	-	-	290,0
38	116,0	284,0	-	-	-	290,0
42	103,0	269,0	-	-	-	290,0
46	92,5	248,0	-	-	-	290,0
50	83,0	227,0	-	-	-	289,0
54	75,0	207,0	-	-	-	287,0
58	68,0	192,0	-	-	-	285,0
60	64,5	184,0	282,0	-	-	284,0
62	61,5	177,0	282,0	-	-	279,0
66	55,5	163,0	280,0	-	-	269,0
68	52,5	155,0	278,0	-	-	264,0
70	-	-	265,0	-	-	258,5
74	-	-	237,0	-	-	249,0
78	-	-	214,0	-	-	234,5
82	-	-	195,0	217,0	-	215,5
84	-	-	186,0	210,0	-	206,0
86	-	-	-	203,0	-	197,0
90	-	-	-	191,0	-	180,0
94	-	-	-	181,0	-	164,0
98	-	-	-	171,0	-	149,5
102	-	-	-	-	-	136,5
103	-	-	-	-	135,0	133,2
106	-	-	-	-	130,0	123,5
110	-	-	-	-	123,0	112,5
112	-	-	-	-	120,0	108,0
114	-	-	-	-	-	103,5
118	-	-	-	-	-	93,5
122	-	-	-	-	-	83,0
126	-	-	-	-	-	72,7
130	-	-	-	-	-	62,5
134	-	-	-	-	-	52,5
136	-	-	-	-	-	47,5

90 m + 72 m

	SWSL					SFSL
	0 t	0 t - 800 t				
	85°	85°	75°	65°	55°	15°
m	t	t	t	t	t	t
30	-	226,0*	-	-	-	-
34	-	217,0*	-	-	-	-
38	106,0	233,0	-	-	-	234,0
42	94,0	231,0	-	-	-	234,0
46	83,5	223,0	-	-	-	234,0
50	74,5	211,0	-	-	-	234,0
54	66,5	196,0	-	-	-	233,0
58	59,5	180,0	-	-	-	230,0
62	53,5	165,0	-	-	-	227,5
66	48,0	153,0	224,0	-	-	224,0
70	43,0	142,0	224,0	-	-	218,5
74	38,5	131,0	223,0	-	-	212,0
78	34,5	120,0	218,0	-	-	206,0
80	32,5	114,0	207,0	-	-	203,0
82	-	-	198,0	-	-	200,0
86	-	-	180,0	-	-	194,0
90	-	-	165,0	184,0	-	183,0
94	-	-	150,0	174,0	-	167,5
98	-	-	-	164,0	-	153,0
102	-	-	-	155,0	-	139,5
106	-	-	-	147,0	-	127,5
110	-	-	-	139,0	-	116,5
112	-	-	-	-	112,0	111,0
114	-	-	-	-	109,0	105,2
118	-	-	-	-	103,0	96,2
122	-	-	-	-	98,0	88,2
124	-	-	-	-	95,5	84,0
126	-	-	-	-	-	79,2
130	-	-	-	-	-	70,0
134	-	-	-	-	-	61,0
138	-	-	-	-	-	52,2
142	-	-	-	-	-	43,7
144	-	-	-	-	-	39,5

* Main boom angle 88° · Hauptauslegerwinkel 88° · Jarret de flèche principale 88° · Inclinazione braccio base 88° · Ángulo de pluma principal 88° · Ângulo da lança principal 88° · Угол подъема гл. стрелы 88°

Main boom angle 88°, 85°, 75°, 65° and 55°, capacities for intermediate boom positions are calculated by the crane control system IC-1
Hauptauslegerwinkel 88°, 85°, 75°, 65° und 55°, Traglasten für Zwischenstellungen des Hauptauslegers werden von der Kransteuerung IC-1 berechnet
Jarret de flèche principale 88°, 85°, 75°, 65° et 55°, le système de commande de la grue IC-1 calcule les charges pour les positions intermédiaires de la flèche
Inclinazione braccio base 88°, 85°, 75°, 65° e 55°, capacità per posizioni intermedie del braccio sono calcolate dal sistema di controllo della gru IC-1
Ángulo de pluma principal 88°, 85°, 75°, 65° y 55° las capacidades para posiciones de pluma intermedias son calculadas por el sistema de control de grúa IC-1
Ângulos da lança principal 88°, 85°, 75°, 65° e 55°; as capacidades para posições da lança intermediária são calculadas pelo sistema de controle da grua IC-1
Грузоподъемность при углах подъема главной стрелы 88°, 85°, 75°, 65° и 55°, грузоподъемность в промежуточных положениях стрелы расчитывается системой управления краном IC-1

SWSL S1 / SFSL S1

295 t + 60 t ZB | 19-30 m | 10,50 m | 9.8 m/s | 360° | ISO

90 m + 84 m

	SWSL					SFSL
	0 t	0 t - 800 t				
	85°	85°	75°	65°	55°	15°
m	t	t	t	t	t	t
34	-	182,0*	-	-	-	-
38	-	177,0*	-	-	-	-
42	84,5	187,0	-	-	-	187,0
46	74,5	185,0	-	-	-	187,0
50	66,0	182,0	-	-	-	186,0
54	58,5	178,0	-	-	-	186,0
58	51,5	168,0	-	-	-	185,0
62	45,5	156,0	-	-	-	183,0
66	40,5	143,0	-	-	-	180,5
70	35,5	131,0	-	-	-	178,0
72	33,5	126,0	176,0	-	-	177,0
74	31,5	122,0	176,0	-	-	175,0
78	27,5	113,0	176,0	-	-	170,5
82	23,7	104,0	176,0	-	-	166,0
84	22,0	100,0	175,0	-	-	164,0
86	-	95,5	175,0	-	-	162,0
88	-	91,0	170,0	-	-	160,0
90	-	-	163,0	-	-	158,0
94	-	-	149,0	-	-	154,0
98	-	-	137,0	154,0	-	150,0
102	-	-	127,0	149,0	-	142,5
106	-	-	114,0	141,0	-	131,0
110	-	-	-	133,0	-	119,0
114	-	-	-	126,0	-	108,5
118	-	-	-	119,0	-	99,0
120	-	-	-	116,0	-	94,0
122	-	-	-	-	91,5	89,2
126	-	-	-	-	86,5	81,7
130	-	-	-	-	82,0	74,5
134	-	-	-	-	78,5	66,2
138	-	-	-	-	-	58,0
142	-	-	-	-	-	50,0
146	-	-	-	-	-	42,2
150	-	-	-	-	-	34,7
154	-	-	-	-	-	27,2
156	-	-	-	-	-	23,5

90 m + 96 m

	SWSL					SFSL
	0 t	0 t - 800 t				
	85°	85°	75°	65°	55°	15°
m	t	t	t	t	t	t
38	-	145,0*	-	-	-	-
42	-	143,0*	-	-	-	-
46	67,0	148,0	-	-	-	148,0
50	58,5	147,0	-	-	-	148,0
54	51,0	145,0	-	-	-	147,0
58	44,5	142,0	-	-	-	147,0
62	39,0	138,0	-	-	-	145,5
66	34,0	130,0	-	-	-	144,0
70	29,5	121,0	-	-	-	142,0
74	25,0	112,0	-	-	-	140,0
78	21,5	104,0	138,0	-	-	138,0
82	-	96,2	138,0	-	-	135,5
86	-	89,0	138,0	-	-	133,0
90	-	82,0	137,0	-	-	130,5
94	-	74,7	137,0	-	-	128,0
98	-	67,5	133,0	-	-	125,5
100	-	64,0	128,0	-	-	124,0
102	-	-	122,0	-	-	122,5
106	-	-	113,0	116,0	-	120,0
110	-	-	104,0	116,0	-	117,0
114	-	-	96,5	116,0	-	110,0
118	-	-	85,5	112,0	-	100,0
122	-	-	-	106,0	-	90,7
126	-	-	-	101,0	-	82,2
130	-	-	-	95,0	75,0	74,2
132	-	-	-	91,5	73,0	71,0
134	-	-	-	-	71,5	67,7
138	-	-	-	-	68,0	60,7
142	-	-	-	-	64,5	53,5
146	-	-	-	-	61,5	46,2
150	-	-	-	-	-	39,2
154	-	-	-	-	-	32,5
158	-	-	-	-	-	25,7
160	-	-	-	-	-	22,5

* Main boom angle 88° · Hauptauslegerwinkel 88° · Jarret de flèche principale 88° · Inclinazione braccio base 88° · Ángulo de pluma principal 88° · Ângulo da lança principal 88° · Угол подъема гл. стрелы 88°

Main boom angle 88°, 85°, 75°, 65° and 55°, capacities for intermediate boom positions are calculated by the crane control system IC-1
Hauptauslegerwinkel 88°, 85°, 75°, 65° und 55°, Traglasten für Zwischenstellungen des Hauptauslegers werden von der Kransteuerung IC-1 berechnet
Jarret de flèche principale 88°, 85°, 75°, 65° et 55°, le système de commande de la grue IC-1 calcule les charges pour les positions intermédiaires de la flèche
Inclinazione braccio base 88°, 85°, 75°, 65° e 55°, capacità per posizioni intermedie del braccio sono calcolate dal sistema di controllo della gru IC-1
Ángulo de pluma principal 88°, 85°, 75°, 65° y 55° las capacidades para posiciones de pluma intermedias son calculadas por el sistema de control de grúa IC-1
Ângulos da lança principal 88°, 85°, 75°, 65° e 55°; as capacidades para posições da lança intermediária são calculadas pelo sistema de controle da grua IC-1
Грузоподъемность при углах подъема главной стрелы 88°, 85°, 75°, 65° и 55°, грузоподъемность в промежуточных положениях стрелы расчитывается системой управления краном IC-1

SWSL S1 / SFSL S1

295 t + 60 t ZB | 19-30 m | 10,50 m | 9.8 m/s | 360° | ISO

90 m + 108 m

	SWSL					SFSL
	0 t	0 t - 800 t				
	85°	85°	75°	65°	55°	15°
m	t	t	t	t	t	t
40	-	115,0*	-	-	-	-
42	-	115,0*	-	-	-	-
46	-	112,0*	-	-	-	-
50	51,0	114,0	-	-	-	115,0
54	44,0	114,0	-	-	-	114,0
58	38,0	112,0	-	-	-	113,0
62	32,5	111,0	-	-	-	112,5
66	27,5	109,0	-	-	-	111,5
70	23,0	104,0	-	-	-	110,0
72	21,0	101,0	-	-	-	109,0
74	-	99,0	-	-	-	108,5
78	-	93,0	-	-	-	107,0
82	-	87,0	-	-	-	105,0
84	-	84,0	104,0	-	-	104,0
86	-	81,2	104,0	-	-	103,0
90	-	75,2	104,0	-	-	101,0
94	-	69,0	104,0	-	-	98,7
98	-	63,0	103,0	-	-	96,5
102	-	56,7	103,0	-	-	94,5
106	-	50,5	102,0	-	-	92,2
110	-	44,2	101,0	-	-	90,0
112	-	41,0	98,5	-	-	89,0
114	-	-	94,5	87,5	-	88,0
118	-	-	87,0	87,5	-	86,0
122	-	-	80,5	87,5	-	83,7
126	-	-	74,5	87,5	-	81,5
128	-	-	70,0	87,5	-	80,5
130	-	-	-	87,5	-	77,0
134	-	-	-	85,5	-	69,5
138	-	-	-	79,0	-	62,7
140	-	-	-	76,0	61,0	60,0
142	-	-	-	73,5	59,5	56,7
144	-	-	-	70,5	58,0	53,5
146	-	-	-	-	56,5	50,2
150	-	-	-	-	53,0	43,5
154	-	-	-	-	50,0	37,0
158	-	-	-	-	47,0	30,7
162	-	-	-	-	-	24,5
164	-	-	-	-	-	21,5

96 m + 48 m

	SWSL					SFSL
	0 t	0 t - 800 t				
	85°	85°	75°	65°	55°	15°
m	t	t	t	t	t	t
24	-	323,0*	-	-	-	-
26	-	311,0*	-	-	-	-
28	-	297,0*	-	-	-	-
30	154,0	337,0	-	-	-	341,0
34	135,0	328,0	-	-	-	341,0
38	119,0	306,0	-	-	-	341,0
42	106,0	278,0	-	-	-	341,0
46	95,5	251,0	-	-	-	339,0
50	86,0	230,0	-	-	-	336,0
54	78,0	211,0	329,0	-	-	333,0
56	74,0	201,0	329,0	-	-	331,0
58	-	-	329,0	-	-	321,0
62	-	-	320,0	-	-	308,5
66	-	-	299,0	-	-	292,5
70	-	-	265,0	-	-	270,5
74	-	-	237,0	-	-	246,5
77	-	-	-	231,0	-	229,7
78	-	-	-	227,0	-	224,5
82	-	-	-	213,0	-	204,0
86	-	-	-	200,0	-	185,5
90	-	-	-	188,0	-	169,5
94	-	-	-	-	-	154,0
97	-	-	-	-	145,0	142,5
98	-	-	-	-	143,0	139,0
102	-	-	-	-	135,0	125,0
104	-	-	-	-	131,0	118,0
106	-	-	-	-	-	113,5
110	-	-	-	-	-	104,0
114	-	-	-	-	-	93,2
118	-	-	-	-	-	82,0
122	-	-	-	-	-	71,2
126	-	-	-	-	-	60,7
128	-	-	-	-	-	55,5

* Main boom angle 88° · Hauptauslegerwinkel 88° · Jarret de flèche principale 88° · Inclinazione braccio base 88° · Ángulo de pluma principal 88° · Ângulo da lança pGrincipal 88° · Угол подъема гл. стрелы 88°

Main boom angle 88°, 85°, 75°, 65° and 55°, capacities for intermediate boom positions are calculated by the crane control system IC-1
Hauptauslegerwinkel 88°, 85°, 75°, 65° und 55°, Traglasten für Zwischenstellungen des Hauptauslegers werden von der Kransteuerung IC-1 berechnet
Jarret de flèche principale 88°, 85°, 75°, 65° et 55°, le système de commande de la grue IC-1 calcule les charges pour les positions intermédiaires de la flèche
Inclinazione braccio base 88°, 85°, 75°, 65° e 55°, capacità per posizioni intermedie del braccio sono calcolate dal sistema di controllo della gru IC-1
Ángulo de pluma principal 88°, 85°, 75°, 65° y 55° las capacidades para posiciones de pluma intermedias son calculadas por el sistema de control de grúa IC-1
Ângulos da lança principal 88°, 85°, 75°, 65° e 55°; as capacidades para posições da lança intermediária são calculadas pelo sistema de controle da grua IC-1
Грузоподъемность при углах подъема главной стрелы 88°, 85°, 75°, 65° и 55°, грузоподъемность в промежуточных положениях стрелы расчитывается системой управления краном IC-1

SWSL S1 / SFSL S1

295 t + 60 t ZB | 19-30 m | 10,50 m | 9.8 m/s | 360° | ISO

96 m + 60 m

	SWSL					SFSL
	0 t	0 t - 800 t				
	85°	85°	75°	65°	55°	15°
m	t	t	t	t	t	t
26	-	262,0*	-	-	-	-
28	-	262,0*	-	-	-	-
30	-	253,0*	-	-	-	-
34	125,0	274,0	-	-	-	275,0
38	110,0	270,0	-	-	-	275,0
42	98,0	256,0	-	-	-	275,0
46	88,0	237,0	-	-	-	275,0
50	78,5	218,0	-	-	-	274,0
54	71,0	198,0	-	-	-	271,0
58	64,0	183,0	-	-	-	268,0
60	60,5	176,0	263,0	-	-	266,0
62	57,5	169,0	263,0	-	-	263,0
66	52,5	155,0	262,0	-	-	255,5
68	50,0	148,0	261,0	-	-	251,0
70	-	-	259,0	-	-	246,0
74	-	-	247,0	-	-	238,0
78	-	-	222,0	-	-	227,5
82	-	-	201,0	-	-	211,5
84	-	-	192,0	-	-	202,0
86	-	-	-	196,0	-	193,5
90	-	-	-	185,0	-	177,0
94	-	-	-	174,0	-	161,5
98	-	-	-	164,0	-	147,5
100	-	-	-	160,0	-	141,0
102	-	-	-	-	-	134,5
106	-	-	-	-	123,0	122,0
110	-	-	-	-	116,0	110,0
114	-	-	-	-	110,0	99,2
116	-	-	-	-	108,0	95,5
118	-	-	-	-	-	91,2
122	-	-	-	-	-	82,0
126	-	-	-	-	-	72,2
130	-	-	-	-	-	62,7
134	-	-	-	-	-	53,5
138	-	-	-	-	-	44,2
140	-	-	-	-	-	39,5

96 m + 72 m

	SWSL					SFSL
	0 t	0 t - 800 t				
	85°	85°	75°	65°	55°	15°
m	t	t	t	t	t	t
30	-	216,0*	-	-	-	-
34	-	207,0*	-	-	-	-
38	-	192,0*	-	-	-	-
40	94,0	221,0	-	-	-	221,0
42	88,5	219,0	-	-	-	221,0
46	78,5	212,0	-	-	-	221,0
50	70,0	201,0	-	-	-	221,0
54	62,5	187,0	-	-	-	220,0
58	55,5	172,0	-	-	-	217,0
62	50,0	157,0	-	-	-	215,0
66	44,5	145,0	210,0	-	-	212,5
70	40,0	135,0	210,0	-	-	208,0
74	35,5	124,0	209,0	-	-	202,0
78	31,5	114,0	207,0	-	-	196,5
80	30,0	109,0	206,0	-	-	194,0
82	-	-	204,0	-	-	191,0
86	-	-	186,0	-	-	185,5
90	-	-	170,0	-	-	177,5
92	-	-	163,0	172,0	-	172,0
94	-	-	156,0	167,0	-	164,5
96	-	-	147,0	162,0	-	157,0
98	-	-	-	157,0	-	150,0
102	-	-	-	149,0	-	136,5
106	-	-	-	141,0	-	124,0
110	-	-	-	133,0	-	113,0
112	-	-	-	130,0	-	108,0
114	-	-	-	-	-	103,0
115	-	-	-	-	101,0	100,5
118	-	-	-	-	97,5	92,7
122	-	-	-	-	92,5	84,2
126	-	-	-	-	87,5	76,5
130	-	-	-	-	-	68,2
134	-	-	-	-	-	59,7
138	-	-	-	-	-	51,5
142	-	-	-	-	-	43,5
146	-	-	-	-	-	35,5
150	-	-	-	-	-	27,5
152	-	-	-	-	-	23,5

* Main boom angle 88° · Hauptauslegerwinkel 88° · Jarret de flèche principale 88° · Inclinazione braccio base 88° · Ángulo de pluma principal 88° · Ângulo da lança principal 88° · Угол подъема гл. стрелы 88°

Main boom angle 88°, 85°, 75°, 65° and 55°, capacities for intermediate boom positions are calculated by the crane control system IC-1
Hauptauslegerwinkel 88°, 85°, 75°, 65° und 55°, Traglasten für Zwischenstellungen des Hauptauslegers werden von der Kransteuerung IC-1 berechnet
Jarret de flèche principale 88°, 85°, 75°, 65° et 55°, le système de commande de la grue IC-1 calcule les charges pour les positions intermédiaires de la flèche
Inclinazione braccio base 88°, 85°, 75°, 65° e 55°, capacità per posizioni intermedie del braccio sono calcolate dal sistema di controllo della gru IC-1
Ángulo de pluma principal 88°, 85°, 75°, 65° y 55° las capacidades para posiciones de pluma intermedias son calculadas por el sistema de control de grúa IC-1
Ângulos da lança principal 88°, 85°, 75°, 65° e 55°; as capacidades para posições da lança intermediária são calculadas pelo sistema de controle da grua IC-1
Грузоподъемность при углах подъема главной стрелы 88°, 85°, 75°, 65° и 55°, грузоподъемность в промежуточных положениях стрелы расчитывается системой управления краном IC-1

SWSL S1 / SFSL S1

CC 9800

295 t + 60 t ZB | 19-30 m | 10,50 m | 9.8 m/s | 360° | ISO

96 m + 84 m

	SWSL					SFSL
	0 t	0 t - 800 t				
	85°	85°	75°	65°	55°	15°
m	t	t	t	t	t	t
34	-	174,0*	-	-	-	-
38	-	168,0*	-	-	-	-
42	-	159,0*	-	-	-	-
44	74,0	176,0	-	-	-	177,0
46	69,5	176,0	-	-	-	177,0
50	61,5	172,0	-	-	-	176,0
54	54,0	168,0	-	-	-	176,0
58	47,5	159,0	-	-	-	175,0
62	42,0	148,0	-	-	-	173,0
66	37,0	136,0	-	-	-	171,0
70	32,5	125,0	-	-	-	169,0
72	30,5	119,0	166,0	-	-	168,0
74	28,5	115,0	166,0	-	-	166,5
78	24,5	107,0	166,0	-	-	163,0
80	23,0	103,0	166,0	-	-	161,0
82	-	98,7	165,0	-	-	159,0
86	-	90,2	164,0	-	-	155,0
90	-	82,0	163,0	-	-	151,0
92	-	78,0	161,0	-	-	149,0
94	-	-	154,0	-	-	147,5
98	-	-	141,0	-	-	144,0
100	-	-	136,0	143,0	-	142,0
102	-	-	130,0	143,0	-	137,5
106	-	-	120,0	135,0	-	127,5
108	-	-	112,0	131,0	-	122,0
110	-	-	-	127,0	-	116,5
114	-	-	-	120,0	-	105,5
118	-	-	-	114,0	-	95,7
122	-	-	-	108,0	-	86,7
124	-	-	-	105,0	-	82,0
126	-	-	-	-	80,5	77,5
130	-	-	-	-	76,0	70,7
134	-	-	-	-	72,0	63,7
138	-	-	-	-	69,0	56,2
142	-	-	-	-	-	48,7
146	-	-	-	-	-	41,2
150	-	-	-	-	-	34,0
154	-	-	-	-	-	27,0
156	-	-	-	-	-	23,5

96 m + 96 m

	SWSL					SFSL
	0 t	0 t - 800 t				
	85°	85°	75°	65°	55°	15°
m	t	t	t	t	t	t
38	-	139,0*	-	-	-	-
42	-	136,0*	-	-	-	-
46	-	132,0*	-	-	-	-
48	58,0	140,0	-	-	-	141,0
50	54,0	140,0	-	-	-	140,0
54	47,0	138,0	-	-	-	140,0
58	41,0	135,0	-	-	-	139,0
62	35,5	132,0	-	-	-	138,5
66	30,5	123,0	-	-	-	137,0
70	26,0	115,0	-	-	-	135,0
74	22,0	107,0	-	-	-	133,0
76	20,0	102,0	-	-	-	132,0
78	-	98,5	128,0	-	-	131,0
82	-	90,7	128,0	-	-	129,0
86	-	84,0	128,0	-	-	126,5
90	-	77,0	128,0	-	-	124,0
94	-	70,0	127,0	-	-	121,5
98	-	63,2	126,0	-	-	119,0
100	-	60,0	126,0	-	-	118,0
102	-	-	125,0	-	-	116,5
106	-	-	116,0	-	-	114,0
108	-	-	111,0	109,0	-	113,0
110	-	-	107,0	109,0	-	111,5
114	-	-	99,0	109,0	-	105,5
118	-	-	90,5	107,0	-	96,5
120	-	-	84,5	104,0	-	92,0
122	-	-	-	101,0	-	87,5
126	-	-	-	95,5	-	79,2
130	-	-	-	90,5	-	71,2
134	-	-	-	86,0	65,0	63,7
138	-	-	-	-	61,5	57,5
142	-	-	-	-	58,5	51,0
146	-	-	-	-	55,5	44,0
150	-	-	-	-	53,0	37,2
154	-	-	-	-	-	30,7
158	-	-	-	-	-	24,2
160	-	-	-	-	-	21,0

* Main boom angle 88° · Hauptauslegerwinkel 88° · Jarret de flèche principale 88° · Inclinazione braccio base 88° · Ángulo de pluma principal 88° · Ângulo da lança principal 88° · Угол подъема гл. стрелы 88°

Main boom angle 88°, 85°, 75°, 65° and 55°, capacities for intermediate boom positions are calculated by the crane control system IC-1
Hauptauslegerwinkel 88°, 85°, 75°, 65° und 55°, Traglasten für Zwischenstellungen des Hauptauslegers werden von der Kransteuerung IC-1 berechnet
Jarret de flèche principale 88°, 85°, 75°, 65° et 55°, le système de commande de la grue IC-1 calcule les charges pour les positions intermédiaires de la flèche
Inclinazione braccio base 88°, 85°, 75°, 65° e 55°, capacità per posizioni intermedie del braccio sono calcolate dal sistema di controllo della gru IC-1
Ángulo de pluma principal 88°, 85°, 75°, 65° y 55° las capacidades para posiciones de pluma intermedias son calculadas por el sistema de control de grúa IC-1
Ângulos da lança principal 88°, 85°, 75°, 65° e 55°; as capacidades para posições da lança intermediária são calculadas pelo sistema de controle da grua IC-1
Грузоподъемность при углах подъема главной стрелы 88°, 85°, 75°, 65° и 55°, грузоподъемность в промежуточных положениях стрелы расчитывается системой управления краном IC-1

SWSL S1 / SFSL S1

295 t + 60 t ZB | 19-30 m | 10,50 m | 9.8 m/s | 360° | ISO

96 m + 108 m

	SWSL					SFSL
	0 t	0 t - 800 t				
	85°	85°	75°	65°	55°	15°
m	t	t	t	t	t	t
42	-	109,0*	-	-	-	-
46	-	107,0*	-	-	-	-
50	-	105,0*	-	-	-	-
52	43,5	109,0	-	-	-	109,0
54	40,0	109,0	-	-	-	109,0
58	34,0	107,0	-	-	-	108,0
62	29,0	106,0	-	-	-	107,0
66	24,0	104,0	-	-	-	106,5
70	20,0	100,0	-	-	-	105,0
74	-	94,0	-	-	-	103,5
78	-	88,0	-	-	-	102,0
82	-	82,0	-	-	-	100,2
84	-	79,0	98,5	-	-	99,5
86	-	76,2	98,5	-	-	98,5
90	-	70,5	98,5	-	-	96,2
94	-	64,5	98,5	-	-	94,0
98	-	58,5	98,5	-	-	92,0
102	-	52,5	98,0	-	-	90,0
106	-	46,5	97,5	-	-	88,0
110	-	40,5	97,0	-	-	86,0
112	-	37,5	97,0	-	-	85,0
114	-	-	96,5	-	-	84,0
116	-	-	93,0	82,0	-	83,0
118	-	-	89,5	82,0	-	82,0
122	-	-	83,0	82,0	-	80,0
126	-	-	76,5	82,0	-	77,2
130	-	-	69,0	82,0	-	72,7
134	-	-	-	81,5	-	66,2
138	-	-	-	77,0	-	59,2
142	-	-	-	73,0	-	53,2
144	-	-	-	71,0	52,5	50,5
146	-	-	-	69,0	51,0	47,2
150	-	-	-	-	47,5	40,7
154	-	-	-	-	44,5	34,5
158	-	-	-	-	41,5	28,5
160	-	-	-	-	40,5	25,5

102 m + 48 m

	SWSL					SFSL
	0 t	0 t - 800 t				
	85°	85°	75°	65°	55°	15°
m	t	t	t	t	t	t
24	-	302,0*	-	-	-	-
26	-	291,0*	-	-	-	-
28	-	279,0*	-	-	-	-
30	-	266,0*	-	-	-	-
32	136,0	318,0	-	-	-	319,0
34	128,0	309,0	-	-	-	319,0
38	113,0	289,0	-	-	-	319,0
42	100,0	263,0	-	-	-	318,0
46	90,0	238,0	-	-	-	316,0
50	81,0	218,0	-	-	-	312,0
54	73,5	200,0	-	-	-	308,0
56	69,5	191,0	302,0	-	-	306,0
58	66,5	182,0	302,0	-	-	303,0
62	-	-	298,0	-	-	289,5
66	-	-	289,0	-	-	278,0
70	-	-	276,0	-	-	261,5
74	-	-	246,0	-	-	240,0
76	-	-	233,0	-	-	229,0
78	-	-	-	-	-	218,5
79	-	-	-	214,0	-	213,2
82	-	-	-	204,0	-	199,0
86	-	-	-	191,0	-	181,0
90	-	-	-	180,0	-	164,0
92	-	-	-	175,0	-	156,0
94	-	-	-	-	-	149,5
98	-	-	-	-	-	136,0
100	-	-	-	-	130,0	129,0
102	-	-	-	-	127,0	122,5
106	-	-	-	-	120,0	110,0
108	-	-	-	-	117,0	104,0
110	-	-	-	-	-	99,0
114	-	-	-	-	-	90,2
118	-	-	-	-	-	80,2
122	-	-	-	-	-	70,0
126	-	-	-	-	-	60,2
130	-	-	-	-	-	50,5
132	-	-	-	-	-	45,5

* Main boom angle 88° · Hauptauslegerwinkel 88° · Jarret de flèche principale 88° · Inclinazione braccio base 88° · Ángulo de pluma principal 88° · Ângulo da lança principal 88° · Угол подъема гл. стрелы 88°

Main boom angle 88°, 85°, 75°, 65° and 55°, capacities for intermediate boom positions are calculated by the crane control system IC-1
Hauptauslegerwinkel 88°, 85°, 75°, 65° und 55°, Traglasten für Zwischenstellungen des Hauptauslegers werden von der Kransteuerung IC-1 berechnet
Jarret de flèche principale 88°, 85°, 75°, 65° et 55°, le système de commande de la grue IC-1 calcule les charges pour les positions intermédiaires de la flèche
Inclinazione braccio base 88°, 85°, 75°, 65° e 55°, capacità per posizioni intermedie del braccio sono calcolate dal sistema di controllo della gru IC-1
Ángulo de pluma principal 88°, 85°, 75°, 65° y 55° las capacidades para posiciones de pluma intermedias son calculadas por el sistema de control de grúa IC-1
Ângulos da lança principal 88°, 85°, 75°, 65° e 55°; as capacidades para posições da lança intermediária são calculadas pelo sistema de controle da grua IC-1
Грузоподъемность при углах подъема главной стрелы 88°, 85°, 75°, 65° и 55°, грузоподъемность в промежуточных положениях стрелы расчитывается системой управления краном IC-1

SWSL S1 / SFSL S1

295 t + 60 t ZB | 19-30 m | 10,50 m | 9.8 m/s | 360° | ISO

102 m + 60 m

	SWSL					SFSL
	0 t	0 t - 800 t				
	85°	85°	75°	65°	55°	15°
m	t	t	t	t	t	t
28	-	246,0*	-	-	-	-
30	-	238,0*	-	-	-	-
34	-	219,0*	-	-	-	-
36	111,0	256,0	-	-	-	257,0
38	104,0	253,0	-	-	-	257,0
42	92,5	241,0	-	-	-	257,0
46	82,5	224,0	-	-	-	256,0
50	74,0	206,0	-	-	-	255,0
54	66,5	187,0	-	-	-	252,0
58	60,0	172,0	-	-	-	249,0
62	54,0	159,0	244,0	-	-	245,5
66	48,5	146,0	243,0	-	-	239,0
68	46,5	140,0	241,0	-	-	235,0
70	-	-	239,0	-	-	231,0
74	-	-	235,0	-	-	223,0
78	-	-	230,0	-	-	215,0
82	-	-	208,0	-	-	204,0
86	-	-	190,0	-	-	188,5
88	-	-	-	182,0	-	180,0
90	-	-	-	177,0	-	172,0
94	-	-	-	166,0	-	156,5
98	-	-	-	157,0	-	142,5
102	-	-	-	148,0	-	130,5
104	-	-	-	145,0	-	125,0
106	-	-	-	-	-	119,0
110	-	-	-	-	109,0	107,0
114	-	-	-	-	103,0	95,7
118	-	-	-	-	98,0	86,5
119	-	-	-	-	97,0	84,5
122	-	-	-	-	-	78,5
126	-	-	-	-	-	70,0
130	-	-	-	-	-	61,0
134	-	-	-	-	-	52,2
138	-	-	-	-	-	43,7
142	-	-	-	-	-	35,2
144	-	-	-	-	-	31,0

102 m + 72 m

	SWSL					SFSL
	0 t	0 t - 800 t				
	85°	85°	75°	65°	55°	15°
m	t	t	t	t	t	t
30	-	201,0*	-	-	-	-
34	-	195,0*	-	-	-	-
38	-	182,0*	-	-	-	-
40	88,5	207,0	-	-	-	207,0
42	83,0	205,0	-	-	-	207,0
46	73,5	200,0	-	-	-	206,0
50	65,0	190,0	-	-	-	206,0
54	58,0	176,0	-	-	-	205,0
58	51,5	162,0	-	-	-	203,0
62	46,0	148,0	-	-	-	200,5
66	41,0	136,0	-	-	-	198,0
68	38,5	131,0	194,0	-	-	197,0
70	36,5	126,0	194,0	-	-	194,5
74	32,5	116,0	193,0	-	-	189,5
78	28,5	106,0	191,0	-	-	184,5
80	27,0	102,0	189,0	-	-	182,0
82	-	-	188,0	-	-	179,5
86	-	-	185,0	-	-	174,5
90	-	-	175,0	-	-	169,0
94	-	-	161,0	-	-	159,0
96	-	-	154,0	155,0	-	152,0
98	-	-	145,0	150,0	-	145,5
102	-	-	-	142,0	-	132,5
106	-	-	-	134,0	-	120,5
110	-	-	-	126,0	-	110,0
114	-	-	-	120,0	-	100,0
118	-	-	-	-	-	90,0
119	-	-	-	-	89,0	87,5
122	-	-	-	-	85,5	80,2
126	-	-	-	-	81,0	72,5
130	-	-	-	-	76,5	65,0
134	-	-	-	-	-	57,0
138	-	-	-	-	-	49,2
142	-	-	-	-	-	41,5
146	-	-	-	-	-	34,0
150	-	-	-	-	-	26,7
152	-	-	-	-	-	23,0

* Main boom angle 88° · Hauptauslegerwinkel 88° · Jarret de flèche principale 88° · Inclinazione braccio base 88° · Ángulo de pluma principal 88° · Ângulo da lança principal 88° · Угол подъема гл. стрелы 88°

Main boom angle 88°, 85°, 75°, 65° and 55°, capacities for intermediate boom positions are calculated by the crane control system IC-1
Hauptauslegerwinkel 88°, 85°, 75°, 65° und 55°, Traglasten für Zwischenstellungen des Hauptauslegers werden von der Kransteuerung IC-1 berechnet
Jarret de flèche principale 88°, 85°, 75°, 65° et 55°, le système de commande de la grue IC-1 calcule les charges pour les positions intermédiaires de la flèche
Inclinazione braccio base 88°, 85°, 75°, 65° e 55°, capacità per posizioni intermedie del braccio sono calcolate dal sistema di controllo della gru IC-1
Ángulo de pluma principal 88°, 85°, 75°, 65° y 55° las capacidades para posiciones de pluma intermedias son calculadas por el sistema de control de grúa IC-1
Ângulos da lança principal 88°, 85°, 75°, 65° e 55°; as capacidades para posições da lança intermediária são calculadas pelo sistema de controle da grua IC-1
Грузоподъемность при углах подъема главной стрелы 88°, 85°, 75°, 65° и 55°, грузоподъемность в промежуточных положениях стрелы расчитывается системой управления краном IC-1

SWSL S1 / SFSL S1

295 t + 60 t ZB | 19-30 m | 10,50 m | 9.8 m/s | 360° | ISO

102 m + 84 m

	SWSL					SFSL
	0 t	0 t - 800 t				
	85°	85°	75°	65°	55°	15°
m	t	t	t	t	t	t
34	-	164,0*	-	-	-	-
38	-	159,0*	-	-	-	-
42	-	150,0*	-	-	-	-
44	69,0	166,0	-	-	-	166,0
46	64,5	165,0	-	-	-	166,0
50	56,5	162,0	-	-	-	165,0
54	49,5	157,0	-	-	-	165,0
58	43,5	149,0	-	-	-	164,0
62	38,0	139,0	-	-	-	163,0
66	33,5	128,0	-	-	-	160,5
70	29,0	117,0	-	-	-	158,0
74	25,0	107,0	155,0	-	-	156,0
78	21,5	99,5	154,0	-	-	153,0
80	20,0	95,5	154,0	-	-	151,0
82	-	91,5	153,0	-	-	149,5
86	-	83,5	152,0	-	-	146,0
90	-	75,7	150,0	-	-	142,5
92	-	72,0	149,0	-	-	141,0
94	-	-	149,0	-	-	139,0
98	-	-	146,0	-	-	135,5
102	-	-	134,0	127,0	-	131,5
106	-	-	124,0	127,0	-	123,0
110	-	-	110,0	120,0	-	112,0
114	-	-	-	114,0	-	101,7
118	-	-	-	108,0	-	91,7
122	-	-	-	102,0	-	83,0
126	-	-	-	97,0	-	74,5
128	-	-	-	-	72,0	70,0
130	-	-	-	-	69,5	66,2
134	-	-	-	-	65,5	59,7
138	-	-	-	-	62,0	52,7
142	-	-	-	-	59,5	45,5
146	-	-	-	-	-	38,5
150	-	-	-	-	-	31,7
154	-	-	-	-	-	25,0
156	-	-	-	-	-	21,5

102 m + 96 m

	SWSL					SFSL
	0 t	0 t - 800 t				
	85°	85°	75°	65°	55°	15°
m	t	t	t	t	t	t
38	-	130,0*	-	-	-	-
42	-	128,0*	-	-	-	-
46	-	124,0*	-	-	-	-
48	53,0	130,0	-	-	-	131,0
50	49,0	130,0	-	-	-	131,0
54	42,5	128,0	-	-	-	130,0
58	37,0	126,0	-	-	-	129,0
62	31,5	123,0	-	-	-	128,5
66	27,0	115,0	-	-	-	127,0
70	22,5	107,0	-	-	-	125,0
72	20,5	103,0	-	-	-	124,0
74	-	99,5	-	-	-	123,0
78	-	91,5	-	-	-	121,0
80	-	87,5	119,0	-	-	120,0
82	-	84,0	119,0	-	-	119,0
86	-	77,2	119,0	-	-	116,5
90	-	70,7	119,0	-	-	114,0
94	-	64,0	118,0	-	-	111,5
98	-	57,2	117,0	-	-	109,0
102	-	50,7	115,0	-	-	106,5
104	-	47,5	115,0	-	-	105,0
106	-	-	114,0	-	-	104,0
110	-	-	110,0	100,0	-	101,5
114	-	-	101,0	100,0	-	98,7
118	-	-	94,0	100,0	-	92,7
120	-	-	89,0	97,5	-	88,0
122	-	-	-	95,0	-	83,5
126	-	-	-	89,5	-	74,7
130	-	-	-	84,5	-	67,0
134	-	-	-	80,0	-	59,7
138	-	-	-	76,0	55,5	53,5
142	-	-	-	-	52,5	47,0
146	-	-	-	-	49,5	40,2
150	-	-	-	-	46,5	34,0
152	-	-	-	-	45,0	31,0
154	-	-	-	-	-	27,7
156	-	-	-	-	-	24,5

* Main boom angle 88° · Hauptauslegerwinkel 88° · Jarret de flèche principale 88° · Inclinazione braccio base 88° · Ángulo de pluma principal 88° · Ângulo da lança principal 88° · Угол подъема гл. стрелы 88°

Main boom angle 88°, 85°, 75°, 65° and 55°, capacities for intermediate boom positions are calculated by the crane control system IC-1
Hauptauslegerwinkel 88°, 85°, 75°, 65° und 55°, Traglasten für Zwischenstellungen des Hauptauslegers werden von der Kransteuerung IC-1 berechnet
Jarret de flèche principale 88°, 85°, 75°, 65° et 55°, le système de commande de la grue IC-1 calcule les charges pour les positions intermédiaires de la flèche
Inclinazione braccio base 88°, 85°, 75°, 65° e 55°, capacità per posizioni intermedie del braccio sono calcolate dal sistema di controllo della gru IC-1
Ángulo de pluma principal 88°, 85°, 75°, 65° y 55° las capacidades para posiciones de pluma intermedias son calculadas por el sistema de control de grúa IC-1
Ângulos da lança principal 88°, 85°, 75°, 65° e 55°; as capacidades para posições da lança intermediária são calculadas pelo sistema de controle da grua IC-1
Грузоподъемность при углах подъема главной стрелы 88°, 85°, 75°, 65° и 55°, грузоподъемность в промежуточных положениях стрелы расчитывается системой управления краном IC-1

SWSL S1 / SFSL S1

295 t + 60 t ZB | 19-30 m | 10,50 m | 9.8 m/s | 360° | ISO

102 m + 108 m

	SWSL					SFSL
	0 t	0 t - 800 t				
	85°	85°	75°	65°	55°	15°
m	t	t	t	t	t	t
42	-	102,0*	-	-	-	-
46	-	101,0*	-	-	-	-
50	-	99,0*	-	-	-	-
52	38,5	102,0	-	-	-	102,0
54	35,5	102,0	-	-	-	102,0
58	30,0	101,0	-	-	-	101,0
62	25,0	99,5	-	-	-	100,5
66	20,5	97,5	-	-	-	99,7
70	-	94,0	-	-	-	99,0
74	-	88,0	-	-	-	97,7
78	-	82,0	-	-	-	96,0
82	-	76,0	-	-	-	94,2
86	-	70,0	91,5	-	-	92,5
90	-	64,2	91,5	-	-	90,5
94	-	58,5	91,5	-	-	88,5
98	-	52,7	91,5	-	-	86,5
102	-	47,2	91,0	-	-	84,5
106	-	41,5	90,5	-	-	82,5
110	-	35,7	90,0	-	-	80,2
112	-	33,0	89,5	-	-	79,0
114	-	-	89,5	-	-	78,0
118	-	-	88,5	75,0	-	76,0
122	-	-	85,0	75,0	-	74,0
126	-	-	78,5	75,0	-	72,0
130	-	-	72,5	75,0	-	68,5
132	-	-	67,5	75,0	-	66,0
134	-	-	-	75,0	-	62,0
138	-	-	-	71,5	-	55,0
142	-	-	-	67,5	-	49,5
146	-	-	-	63,5	44,5	43,2
148	-	-	-	62,0	42,5	40,0
150	-	-	-	-	41,0	37,0
154	-	-	-	-	38,5	31,0
158	-	-	-	-	35,5	25,2
160	-	-	-	-	34,5	22,5
162	-	-	-	-	33,2	-
164	-	-	-	-	32,0	-

108 m + 48 m

	SWSL					SFSL
	0 t	0 t - 800 t				
	85°	85°	75°	65°	55°	15°
m	t	t	t	t	t	t
24	-	280,0*	-	-	-	-
26	-	271,0*	-	-	-	-
28	-	261,0*	-	-	-	-
30	-	250,0*	-	-	-	-
32	129,0	291,0	-	-	-	294,0
34	121,0	287,0	-	-	-	294,0
38	107,0	269,0	-	-	-	293,0
42	95,5	247,0	-	-	-	292,0
46	85,5	224,0	-	-	-	291,0
50	76,5	205,0	-	-	-	287,0
54	69,0	188,0	-	-	-	283,0
58	62,5	171,0	277,0	-	-	279,0
62	-	-	274,0	-	-	270,0
66	-	-	267,0	-	-	259,5
70	-	-	260,0	-	-	250,0
74	-	-	246,0	-	-	234,0
76	-	-	238,0	-	-	223,0
78	-	-	-	-	-	213,0
82	-	-	-	196,0	-	194,0
86	-	-	-	184,0	-	176,5
90	-	-	-	173,0	-	160,5
94	-	-	-	163,0	-	145,5
98	-	-	-	-	-	132,0
102	-	-	-	-	-	120,0
104	-	-	-	-	116,0	114,0
106	-	-	-	-	113,0	108,0
110	-	-	-	-	107,0	96,2
111	-	-	-	-	105,0	93,3
114	-	-	-	-	-	86,5
118	-	-	-	-	-	78,0
122	-	-	-	-	-	68,7
126	-	-	-	-	-	59,2
130	-	-	-	-	-	50,2
134	-	-	-	-	-	41,5
138	-	-	-	-	-	32,5
140	-	-	-	-	-	28,0

* Main boom angle 88° · Hauptauslegerwinkel 88° · Jarret de flèche principale 88° · Inclinazione braccio base 88° · Ángulo de pluma principal 88° · Ângulo da lança principal 88° · Угол подъема гл. стрелы 88°

Main boom angle 88°, 85°, 75°, 65° and 55°, capacities for intermediate boom positions are calculated by the crane control system IC-1
Hauptauslegerwinkel 88°, 85°, 75°, 65° und 55°, Traglasten für Zwischenstellungen des Hauptauslegers werden von der Kransteuerung IC-1 berechnet
Jarret de flèche principale 88°, 85°, 75°, 65° et 55°, le système de commande de la grue IC-1 calcule les charges pour les positions intermédiaires de la flèche
Inclinazione braccio base 88°, 85°, 75°, 65° e 55°, capacità per posizioni intermedie del braccio sono calcolate dal sistema di controllo della gru IC-1
Ángulo de pluma principal 88°, 85°, 75°, 65° y 55° las capacidades para posiciones de pluma intermedias son calculadas por el sistema de control de grúa IC-1
Ângulos da lança principal 88°, 85°, 75°, 65° e 55°; as capacidades para posições da lança intermediária são calculadas pelo sistema de controle da grua IC-1
Грузоподъемность при углах подъема главной стрелы 88°, 85°, 75°, 65° и 55°, грузоподъемность в промежуточных положениях стрелы расчитывается системой управления краном IC-1

SWSL S1 / SFSL S1

295 t + 60 t ZB | 19-30 m | 10,50 m | 9.8 m/s | 360° | ISO

108 m + 60 m

	SWSL					SFSL
	0 t	0 t - 800 t				
	85°	85°	75°	65°	55°	15°
m	t	t	t	t	t	t
28	-	229,0*	-	-	-	-
30	-	221,0*	-	-	-	-
34	-	205,0*	-	-	-	-
36	105,0	237,0	-	-	-	237,0
38	98,5	235,0	-	-	-	237,0
42	87,5	225,0	-	-	-	237,0
46	78,0	210,0	-	-	-	236,0
50	69,5	193,0	-	-	-	235,0
54	62,5	176,0	-	-	-	233,0
58	56,0	161,0	-	-	-	229,0
62	50,5	149,0	-	-	-	226,0
64	48,0	143,0	223,0	-	-	224,0
66	45,5	137,0	223,0	-	-	221,0
70	41,0	125,0	220,0	-	-	214,5
74	-	-	215,0	-	-	208,0
78	-	-	211,0	-	-	201,5
82	-	-	204,0	-	-	194,5
86	-	-	193,0	-	-	183,0
88	-	-	187,0	-	-	175,0
90	-	-	-	169,0	-	167,5
94	-	-	-	159,0	-	153,0
98	-	-	-	150,0	-	139,0
102	-	-	-	142,0	-	126,0
106	-	-	-	134,0	-	115,0
110	-	-	-	-	-	104,5
113	-	-	-	-	98,0	96,3
114	-	-	-	-	97,0	93,7
118	-	-	-	-	91,5	83,5
122	-	-	-	-	87,0	75,0
126	-	-	-	-	-	67,5
130	-	-	-	-	-	59,2
134	-	-	-	-	-	51,0
138	-	-	-	-	-	43,0
142	-	-	-	-	-	35,0
146	-	-	-	-	-	27,0
148	-	-	-	-	-	23,0

108 m + 72 m

	SWSL					SFSL
	0 t	0 t - 800 t				
	85°	85°	75°	65°	55°	15°
m	t	t	t	t	t	t
30	-	187,0*	-	-	-	-
34	-	181,0*	-	-	-	-
38	-	170,0*	-	-	-	-
40	83,0	191,0	-	-	-	191,0
42	78,0	191,0	-	-	-	191,0
46	68,5	186,0	-	-	-	191,0
50	61,0	177,0	-	-	-	190,0
54	54,0	164,0	-	-	-	189,0
58	48,0	151,0	-	-	-	188,0
62	42,5	138,0	-	-	-	185,0
66	37,5	127,0	-	-	-	182,5
70	33,0	118,0	178,0	-	-	179,5
74	29,5	108,0	177,0	-	-	175,5
78	25,5	99,0	175,0	-	-	170,5
80	24,0	94,5	174,0	-	-	168,0
82	-	-	172,0	-	-	165,5
86	-	-	169,0	-	-	160,5
90	-	-	166,0	-	-	156,0
94	-	-	158,0	-	-	151,0
98	-	-	149,0	143,0	-	141,5
100	-	-	142,0	139,0	-	135,0
102	-	-	-	135,0	-	129,0
106	-	-	-	127,0	-	117,0
110	-	-	-	120,0	-	105,5
114	-	-	-	114,0	-	96,0
118	-	-	-	108,0	-	87,0
122	-	-	-	-	79,0	77,5
126	-	-	-	-	74,5	68,5
130	-	-	-	-	70,5	61,7
134	-	-	-	-	67,0	54,7
138	-	-	-	-	-	47,2
142	-	-	-	-	-	39,7
146	-	-	-	-	-	32,5
150	-	-	-	-	-	25,5
152	-	-	-	-	-	22,0

* Main boom angle 88° · Hauptauslegerwinkel 88° · Jarret de flèche principale 88° · Inclinazione braccio base 88° · Ángulo de pluma principal 88° · Ângulo da lança principal 88° · Угол подъема гл. стрелы 88°

Main boom angle 88°, 85°, 75°, 65° and 55°, capacities for intermediate boom positions are calculated by the crane control system IC-1
Hauptauslegerwinkel 88°, 85°, 75°, 65° und 55°, Traglasten für Zwischenstellungen des Hauptauslegers werden von der Kransteuerung IC-1 berechnet
Jarret de flèche principale 88°, 85°, 75°, 65° et 55°, le système de commande de la grue IC-1 calcule les charges pour les positions intermédiaires de la flèche
Inclinazione braccio base 88°, 85°, 75°, 65° e 55°, capacità per posizioni intermedie del braccio sono calcolate dal sistema di controllo della gru IC-1
Ángulo de pluma principal 88°, 85°, 75°, 65° y 55° las capacidades para posiciones de pluma intermedias son calculadas por el sistema de control de grúa IC-1
Ângulos da lança principal 88°, 85°, 75°, 65° e 55°; as capacidades para posições da lança intermediária são calculadas pelo sistema de controle da grua IC-1
Грузоподъемность при углах подъема главной стрелы 88°, 85°, 75°, 65° и 55°, грузоподъемность в промежуточных положениях стрелы расчитывается системой управления краном IC-1

SWSL S1 / SFSL S1

295 t + 60 t ZB | 19-30 m | 10,50 m | 9.8 m/s | 360° | ISO

108 m + 84 m

	SWSL					SFSL
	0 t	0 t - 800 t				
	85°	85°	75°	65°	55°	15°
m	t	t	t	t	t	t
34	-	152,0*	-	-	-	-
38	-	147,0*	-	-	-	-
42	-	140,0*	-	-	-	-
44	64,0	153,0	-	-	-	154,0
46	60,0	153,0	-	-	-	154,0
50	52,0	150,0	-	-	-	153,0
54	45,5	146,0	-	-	-	152,0
58	40,0	139,0	-	-	-	152,0
62	34,5	129,0	-	-	-	150,5
66	30,0	119,0	-	-	-	148,5
70	26,0	108,0	-	-	-	146,0
74	22,0	99,5	-	-	-	144,0
76	20,5	95,5	142,0	-	-	143,0
78	-	92,0	142,0	-	-	141,5
82	-	84,5	141,0	-	-	138,5
86	-	77,2	140,0	-	-	135,0
90	-	69,7	138,0	-	-	131,5
92	-	66,0	137,0	-	-	130,0
94	-	-	136,0	-	-	128,5
98	-	-	134,0	-	-	125,5
102	-	-	129,0	-	-	122,5
106	-	-	123,0	116,0	-	117,0
110	-	-	116,0	114,0	-	108,0
114	-	-	-	108,0	-	98,0
118	-	-	-	102,0	-	88,5
122	-	-	-	96,0	-	80,0
126	-	-	-	91,0	-	71,7
128	-	-	-	88,5	-	67,5
130	-	-	-	-	-	63,5
132	-	-	-	-	61,5	59,5
134	-	-	-	-	59,5	56,5
138	-	-	-	-	56,5	50,0
142	-	-	-	-	54,0	43,0
144	-	-	-	-	52,5	39,5
146	-	-	-	-	-	36,2
150	-	-	-	-	-	29,7
154	-	-	-	-	-	23,2
156	-	-	-	-	-	20,0

108 m + 96 m

	SWSL					SFSL
	0 t	0 t - 800 t				
	85°	85°	75°	65°	55°	15°
m	t	t	t	t	t	t
38	-	121,0*	-	-	-	-
42	-	119,0*	-	-	-	-
46	-	115,0*	-	-	-	-
48	48,5	121,0	-	-	-	121,0
50	45,0	121,0	-	-	-	121,0
54	38,5	119,0	-	-	-	120,0
58	33,0	117,0	-	-	-	120,0
62	28,0	114,0	-	-	-	119,0
66	23,5	107,0	-	-	-	118,0
68	21,5	103,0	-	-	-	117,0
70	-	100,0	-	-	-	116,5
74	-	92,0	-	-	-	115,0
78	-	84,5	-	-	-	113,0
82	-	77,0	110,0	-	-	110,5
86	-	70,5	110,0	-	-	108,0
90	-	64,2	109,0	-	-	105,5
94	-	58,0	108,0	-	-	103,0
98	-	51,7	107,0	-	-	100,7
102	-	45,5	106,0	-	-	98,2
104	-	42,5	105,0	-	-	97,0
106	-	-	104,0	-	-	95,5
110	-	-	103,0	-	-	92,7
114	-	-	97,5	90,5	-	90,2
118	-	-	92,0	90,5	-	86,5
122	-	-	86,5	89,0	-	79,7
126	-	-	-	84,0	-	71,5
130	-	-	-	79,0	-	63,5
134	-	-	-	74,5	-	56,2
138	-	-	-	70,5	-	50,2
140	-	-	-	69,0	-	47,0
142	-	-	-	-	46,5	43,7
146	-	-	-	-	43,0	37,2
150	-	-	-	-	40,5	31,0
154	-	-	-	-	37,5	25,0
156	-	-	-	-	36,5	22,0

* Main boom angle 88° · Hauptauslegerwinkel 88° · Jarret de flèche principale 88° · Inclinazione braccio base 88° · Ángulo de pluma principal 88° · Ângulo da lança principal 88° · Угол подъема гл. стрелы 88°

Main boom angle 88°, 85°, 75°, 65° and 55°, capacities for intermediate boom positions are calculated by the crane control system IC-1
Hauptauslegerwinkel 88°, 85°, 75°, 65° und 55°, Traglasten für Zwischenstellungen des Hauptauslegers werden von der Kransteuerung IC-1 berechnet
Jarret de flèche principale 88°, 85°, 75°, 65° et 55°, le système de commande de la grue IC-1 calcule les charges pour les positions intermédiaires de la flèche
Inclinazione braccio base 88°, 85°, 75°, 65° e 55°, capacità per posizioni intermedie del braccio sono calcolate dal sistema di controllo della gru IC-1
Ángulo de pluma principal 88°, 85°, 75°, 65° y 55° las capacidades para posiciones de pluma intermedias son calculadas por el sistema de control de grúa IC-1
Ângulos da lança principal 88°, 85°, 75°, 65° e 55°; as capacidades para posições da lança intermediária são calculadas pelo sistema de controle da grua IC-1
Грузоподъемность при углах подъема главной стрелы 88°, 85°, 75°, 65° и 55°, грузоподъемность в промежуточных положениях стрелы расчитывается системой управления краном IC-1

SWSL S1 / SFSL S1

295 t + 60 t ZB | 19-30 m | 10,50 m | 9.8 m/s | 360° | ISO

114 m + 60 m

	SWSL					SFSL
	0 t	0 t - 800 t				
	85°	85°	75°	65°	55°	15°
m	t	t	t	t	t	t
28	-	214,0*	-	-	-	-
30	-	207,0*	-	-	-	-
34	-	195,0*	-	-	-	-
36	98,0	222,0	-	-	-	223,0
38	92,0	222,0	-	-	-	223,0
42	81,5	212,0	-	-	-	223,0
46	72,5	201,0	-	-	-	223,0
50	64,5	188,0	-	-	-	223,0
54	57,5	175,0	-	-	-	223,0
58	51,5	163,0	-	-	-	222,0
62	46,5	151,0	-	-	-	221,5
66	41,5	140,0	220,0	-	-	220,0
70	37,0	128,0	220,0	-	-	215,0
74	-	-	218,0	-	-	207,0
78	-	-	210,0	-	-	195,5
82	-	-	207,0	-	-	188,5
86	-	-	196,0	-	-	176,5
90	-	-	185,0	-	-	161,0
92	-	-	-	155,0	-	154,0
94	-	-	-	150,0	-	147,0
98	-	-	-	142,0	-	133,5
102	-	-	-	134,0	-	121,0
106	-	-	-	126,0	-	109,5
108	-	-	-	123,0	-	104,0
110	-	-	-	-	-	99,2
114	-	-	-	-	-	89,5
117	-	-	-	-	84,5	82,0
118	-	-	-	-	83,5	79,5
122	-	-	-	-	79,0	70,0
126	-	-	-	-	74,5	62,7
130	-	-	-	-	-	55,0
134	-	-	-	-	-	47,2
138	-	-	-	-	-	39,7
142	-	-	-	-	-	32,2
146	-	-	-	-	-	24,7
148	-	-	-	-	-	21,0

114 m + 72 m

	SWSL					SFSL
	0 t	0 t - 800 t				
	85°	85°	75°	65°	55°	15°
m	t	t	t	t	t	t
32	-	175,0*	-	-	-	-
34	-	170,0*	-	-	-	-
38	-	161,0*	-	-	-	-
40	76,5	180,0	-	-	-	180,0
42	72,0	180,0	-	-	-	180,0
46	63,5	176,0	-	-	-	180,0
50	56,0	169,0	-	-	-	180,0
54	49,0	159,0	-	-	-	180,0
58	43,5	149,0	-	-	-	180,0
62	38,5	139,0	-	-	-	179,5
66	34,0	129,0	-	-	-	178,5
70	29,5	120,0	-	-	-	177,5
72	27,5	116,0	176,0	-	-	177,0
74	26,0	111,0	176,0	-	-	174,5
78	22,5	103,0	176,0	-	-	169,5
80	21,0	99,0	176,0	-	-	167,0
82	-	-	176,0	-	-	164,0
86	-	-	173,0	-	-	158,0
90	-	-	169,0	-	-	151,5
94	-	-	163,0	-	-	145,5
98	-	-	157,0	-	-	135,5
100	-	-	150,0	129,0	-	129,0
102	-	-	-	127,0	-	123,0
106	-	-	-	119,0	-	111,5
110	-	-	-	113,0	-	101,0
114	-	-	-	106,0	-	91,0
118	-	-	-	101,0	-	82,0
120	-	-	-	98,0	-	78,0
122	-	-	-	-	-	73,5
126	-	-	-	-	67,0	64,7
130	-	-	-	-	63,0	57,2
134	-	-	-	-	59,5	50,2
136	-	-	-	-	57,5	46,5
138	-	-	-	-	-	43,0
142	-	-	-	-	-	36,0
146	-	-	-	-	-	29,2
148	-	-	-	-	-	26,0

* Main boom angle 88° · Hauptauslegerwinkel 88° · Jarret de flèche principale 88° · Inclinazione braccio base 88° · Ángulo de pluma principal 88° · Ângulo da lança principal 88° · Угол подъема гл. стрелы 88°

Main boom angle 88°, 85°, 75°, 65° and 55°, capacities for intermediate boom positions are calculated by the crane control system IC-1
Hauptauslegerwinkel 88°, 85°, 75°, 65° und 55°, Traglasten für Zwischenstellungen des Hauptauslegers werden von der Kransteuerung IC-1 berechnet
Jarret de flèche principale 88°, 85°, 75°, 65° et 55°, le système de commande de la grue IC-1 calcule les charges pour les positions intermédiaires de la flèche
Inclinazione braccio base 88°, 85°, 75°, 65° e 55°, capacità per posizioni intermedie del braccio sono calcolate dal sistema di controllo della gru IC-1
Ángulo de pluma principal 88°, 85°, 75°, 65° y 55° las capacidades para posiciones de pluma intermedias son calculadas por el sistema de control de grúa IC-1
Ângulos da lança principal 88°, 85°, 75°, 65° e 55°; as capacidades para posições da lança intermediária são calculadas pelo sistema de controle da grua IC-1
Грузоподъемность при углах подъема главной стрелы 88°, 85°, 75°, 65° и 55°, грузоподъемность в промежуточных положениях стрелы расчитывается системой управления краном IC-1

SWSL S1 / SFSL S1

295 t + 60 t ZB | 19-30 m | 10,50 m | 9.8 m/s | 360° | ISO

114 m + 84 m

	SWSL					SFSL
	0 t	0 t - 800 t				
	85°	85°	75°	65°	55°	15°
m	t	t	t	t	t	t
34	-	141,0*	-	-	-	-
38	-	138,0*	-	-	-	-
42	-	132,0*	-	-	-	-
44	58,5	144,0	-	-	-	145,0
46	54,5	144,0	-	-	-	145,0
50	47,5	142,0	-	-	-	145,0
54	41,0	139,0	-	-	-	145,0
58	35,5	134,0	-	-	-	145,0
62	30,5	126,0	-	-	-	144,5
66	26,0	118,0	-	-	-	143,5
70	22,5	110,0	-	-	-	142,5
72	20,5	105,0	-	-	-	142,0
74	-	102,0	-	-	-	141,5
78	-	94,5	140,0	-	-	140,5
82	-	87,5	140,0	-	-	137,5
86	-	80,7	140,0	-	-	133,0
90	-	74,0	140,0	-	-	129,5
92	-	70,5	140,0	-	-	128,0
94	-	-	139,0	-	-	126,0
98	-	-	139,0	-	-	122,0
102	-	-	135,0	-	-	118,0
106	-	-	130,0	-	-	112,0
108	-	-	126,0	108,0	-	108,0
110	-	-	121,0	106,0	-	103,0
112	-	-	114,0	103,0	-	98,0
114	-	-	-	100,0	-	93,0
118	-	-	-	94,5	-	83,5
122	-	-	-	89,5	-	74,7
126	-	-	-	84,5	-	66,7
130	-	-	-	80,0	-	59,2
132	-	-	-	77,5	-	55,5
134	-	-	-	-	-	52,0
136	-	-	-	-	51,5	48,5
138	-	-	-	-	49,5	45,0
142	-	-	-	-	46,5	38,2
146	-	-	-	-	43,5	32,0
148	-	-	-	-	42,0	29,0
150	-	-	-	-	-	25,7
152	-	-	-	-	-	22,5

114 m + 96 m

	SWSL					SFSL
	0 t	0 t - 800 t				
	85°	85°	75°	65°	55°	15°
m	t	t	t	t	t	t
38	-	113,0*	-	-	-	-
42	-	111,0*	-	-	-	-
46	-	108,0*	-	-	-	-
48	43,5	114,0	-	-	-	115,0
50	40,0	114,0	-	-	-	115,0
54	34,0	113,0	-	-	-	114,0
58	28,5	111,0	-	-	-	114,0
62	24,0	108,0	-	-	-	113,5
64	22,0	107,0	-	-	-	113,0
66	-	104,0	-	-	-	113,0
70	-	98,0	-	-	-	112,5
74	-	92,0	-	-	-	111,5
78	-	86,5	-	-	-	110,5
82	-	80,7	-	-	-	109,0
84	-	78,0	108,0	-	-	108,0
86	-	75,2	108,0	-	-	107,0
90	-	69,5	108,0	-	-	104,5
94	-	63,7	108,0	-	-	101,5
98	-	58,2	108,0	-	-	98,7
102	-	52,7	108,0	-	-	96,0
104	-	50,0	108,0	-	-	94,5
106	-	-	108,0	-	-	93,2
110	-	-	108,0	-	-	90,5
114	-	-	106,0	-	-	87,5
116	-	-	103,0	88,5	-	86,0
118	-	-	99,0	87,0	-	82,5
122	-	-	91,5	82,0	-	74,7
124	-	-	86,0	79,5	-	70,5
126	-	-	-	77,0	-	66,5
130	-	-	-	72,5	-	58,7
134	-	-	-	68,0	-	51,7
138	-	-	-	64,5	-	45,2
142	-	-	-	60,5	-	38,7
144	-	-	-	-	37,0	35,5
146	-	-	-	-	36,0	32,5
150	-	-	-	-	33,0	26,5
152	-	-	-	-	31,5	23,5
154	-	-	-	-	30,5	-
158	-	-	-	-	28,0	-
160	-	-	-	-	27,0	-

* Main boom angle 88° · Hauptauslegerwinkel 88° · Jarret de flèche principale 88° · Inclinazione braccio base 88° · Ángulo de pluma principal 88° · Ângulo da lança principal 88° · Угол подъема гл. стрелы 88°

Main boom angle 88°, 85°, 75°, 65° and 55°, capacities for intermediate boom positions are calculated by the crane control system IC-1
Hauptauslegerwinkel 88°, 85°, 75°, 65° und 55°, Traglasten für Zwischenstellungen des Hauptauslegers werden von der Kransteuerung IC-1 berechnet
Jarret de flèche principale 88°, 85°, 75°, 65° et 55°, le système de commande de la grue IC-1 calcule les charges pour les positions intermédiaires de la flèche
Inclinazione braccio base 88°, 85°, 75°, 65° e 55°, capacità per posizioni intermedie del braccio sono calcolate dal sistema di controllo della gru IC-1
Ángulo de pluma principal 88°, 85°, 75°, 65° y 55° las capacidades para posiciones de pluma intermedias son calculadas por el sistema de control de grúa IC-1
Ângulos da lança principal 88°, 85°, 75°, 65° e 55°; as capacidades para posições da lança intermediária são calculadas pelo sistema de controle da grua IC-1
Грузоподъемность при углах подъема главной стрелы 88°, 85°, 75°, 65° и 55°, грузоподъемность в промежуточных положениях стрелы расчитывается системой управления краном IC-1

SWSL S1 / SFSL S1

295 t + 60 t ZB | 19-30 m | 10,50 m | 9.8 m/s | 360° | ISO

120 m + 54 m

	SWSL					SFSL
	0 t	0 t - 800 t				
	85°	85°	75°	65°	55°	15°
m	t	t	t	t	t	t
26	-	219,0*	-	-	-	-
28	-	219,0*	-	-	-	-
30	-	212,0*	-	-	-	-
34	-	197,0*	-	-	-	229,0
36	97,5	227,0	-	-	-	229,0
38	91,5	224,0	-	-	-	228,0
42	81,5	210,0	-	-	-	227,0
46	72,5	194,0	-	-	-	227,0
50	65,0	178,0	-	-	-	227,0
54	58,0	162,0	-	-	-	225,0
58	52,0	150,0	-	-	-	223,0
62	47,0	137,0	-	-	-	221,0
64	44,5	131,0	219,0	-	-	220,0
66	-	-	219,0	-	-	217,0
70	-	-	217,0	-	-	210,5
74	-	-	213,0	-	-	203,5
78	-	-	210,0	-	-	196,0
82	-	-	205,0	-	-	184,5
86	-	-	192,0	-	-	169,0
90	-	-	-	-	-	153,5
92	-	-	-	150,0	-	146,0
94	-	-	-	145,0	-	139,5
98	-	-	-	137,0	-	126,5
102	-	-	-	129,0	-	114,0
106	-	-	-	122,0	-	103,5
110	-	-	-	-	-	93,7
114	-	-	-	-	-	83,5
115	-	-	-	-	83,0	81,0
118	-	-	-	-	79,5	73,7
122	-	-	-	-	75,0	65,0
124	-	-	-	-	73,0	61,5
126	-	-	-	-	-	57,5
130	-	-	-	-	-	49,5
134	-	-	-	-	-	41,7
138	-	-	-	-	-	34,2
142	-	-	-	-	-	27,0
144	-	-	-	-	-	23,5

120 m + 66 m

	SWSL					SFSL
	0 t	0 t - 800 t				
	85°	85°	75°	65°	55°	15°
m	t	t	t	t	t	t
30	-	179,0*	-	-	-	-
34	-	174,0*	-	-	-	-
38	-	162,0*	-	-	-	-
40	78,0	184,0	-	-	-	185,0
42	73,0	183,0	-	-	-	184,0
46	64,5	176,0	-	-	-	183,0
50	57,5	164,0	-	-	-	183,0
54	51,0	152,0	-	-	-	183,0
58	45,5	139,0	-	-	-	181,0
62	40,5	127,0	-	-	-	180,0
66	36,0	118,0	-	-	-	178,0
70	32,0	108,0	176,0	-	-	175,5
74	28,0	99,0	175,0	-	-	171,5
76	26,5	94,0	174,0	-	-	169,0
78	-	-	174,0	-	-	166,5
82	-	-	171,0	-	-	161,5
86	-	-	169,0	-	-	156,5
90	-	-	167,0	-	-	151,5
94	-	-	164,0	-	-	142,5
96	-	-	161,0	-	-	136,0
98	-	-	-	-	-	130,0
100	-	-	-	127,0	-	124,0
102	-	-	-	123,0	-	118,0
106	-	-	-	116,0	-	106,5
110	-	-	-	110,0	-	96,0
114	-	-	-	104,0	-	86,2
116	-	-	-	101,0	-	81,5
118	-	-	-	-	-	77,5
122	-	-	-	-	-	69,2
126	-	-	-	-	64,5	60,7
130	-	-	-	-	61,0	53,5
134	-	-	-	-	57,5	46,2
138	-	-	-	-	-	39,0
142	-	-	-	-	-	32,2
146	-	-	-	-	-	25,7
148	-	-	-	-	-	22,5

* Main boom angle 88° · Hauptauslegerwinkel 88° · Jarret de flèche principale 88° · Inclinazione braccio base 88° · Ángulo de pluma principal 88° · Ângulo da lança principal 88° · Угол подъема гл. стрелы 88°

Main boom angle 88°, 85°, 75°, 65° and 55°, capacities for intermediate boom positions are calculated by the crane control system IC-1
Hauptauslegerwinkel 88°, 85°, 75°, 65° und 55°, Traglasten für Zwischenstellungen des Hauptauslegers werden von der Kransteuerung IC-1 berechnet
Jarret de flèche principale 88°, 85°, 75°, 65° et 55°, le système de commande de la grue IC-1 calcule les charges pour les positions intermédiaires de la flèche
Inclinazione braccio base 88°, 85°, 75°, 65° e 55°, capacità per posizioni intermedie del braccio sono calcolate dal sistema di controllo della gru IC-1
Ángulo de pluma principal 88°, 85°, 75°, 65° y 55° las capacidades para posiciones de pluma intermedias son calculadas por el sistema de control de grúa IC-1
Ângulos da lança principal 88°, 85°, 75°, 65° e 55°; as capacidades para posições da lança intermediária são calculadas pelo sistema de controle da grua IC-1
Грузоподъемность при углах подъема главной стрелы 88°, 85°, 75°, 65° и 55°, грузоподъемность в промежуточных положениях стрелы расчитывается системой управления краном IC-1

SWSL S1 / SFSL S1

295 t + 60 t ZB | 19-30 m | 10,50 m | 9.8 m/s | 360° | ISO

120 m + 78 m

	SWSL					SFSL
	0 t	0 t - 800 t				
	85°	85°	75°	65°	55°	15°
m	t	t	t	t	t	t
34	-	148,0*	-	-	-	-
38	-	142,0*	-	-	-	-
42	-	133,0*	-	-	-	-
44	58,5	148,0	-	-	-	149,0
46	54,5	148,0	-	-	-	148,0
50	47,5	144,0	-	-	-	148,0
54	41,5	138,0	-	-	-	147,0
58	36,0	129,0	-	-	-	147,0
62	31,5	118,0	-	-	-	146,0
66	27,0	108,0	-	-	-	144,5
70	23,0	98,5	-	-	-	143,0
72	21,5	94,5	-	-	-	142,0
74	-	91,0	-	-	-	141,5
76	-	87,0	140,0	-	-	141,0
78	-	83,5	140,0	-	-	139,5
82	-	75,7	140,0	-	-	136,0
86	-	68,2	139,0	-	-	132,5
88	-	64,5	138,0	-	-	131,0
90	-	-	137,0	-	-	129,0
94	-	-	136,0	-	-	125,0
98	-	-	135,0	-	-	121,5
102	-	-	133,0	-	-	116,0
106	-	-	132,0	108,0	-	106,5
108	-	-	128,0	105,0	-	101,0
110	-	-	-	101,0	-	96,2
114	-	-	-	95,5	-	86,7
118	-	-	-	90,0	-	77,5
122	-	-	-	85,0	-	68,7
126	-	-	-	80,5	-	61,0
128	-	-	-	78,5	-	57,5
130	-	-	-	-	-	53,5
134	-	-	-	-	48,5	46,5
138	-	-	-	-	45,5	39,5
142	-	-	-	-	42,5	32,7
146	-	-	-	-	40,0	26,5
148	-	-	-	-	-	23,5

120 m + 90 m

	SWSL					SFSL
	0 t	0 t - 800 t				
	85°	85°	75°	65°	55°	15°
m	t	t	t	t	t	t
36	-	118,0*	-	-	-	-
38	-	118,0*	-	-	-	-
42	-	114,0*	-	-	-	-
46	-	109,0*	-	-	-	-
48	43,5	117,0	-	-	-	117,0
50	40,0	117,0	-	-	-	117,0
54	34,5	115,0	-	-	-	117,0
58	29,0	112,0	-	-	-	116,0
62	24,5	107,0	-	-	-	116,0
66	20,5	99,5	-	-	-	115,5
70	-	91,5	-	-	-	114,0
74	-	83,0	-	-	-	112,5
78	-	75,0	-	-	-	111,5
82	-	68,7	109,0	-	-	110,0
86	-	62,5	109,0	-	-	107,5
90	-	56,5	109,0	-	-	104,5
94	-	50,2	108,0	-	-	102,0
96	-	47,0	108,0	-	-	101,0
98	-	-	107,0	-	-	99,5
102	-	-	106,0	-	-	96,5
106	-	-	105,0	-	-	93,7
110	-	-	104,0	-	-	91,0
114	-	-	104,0	90,5	-	87,0
118	-	-	103,0	85,0	-	80,2
120	-	-	98,5	82,5	-	76,0
122	-	-	-	80,0	-	71,7
126	-	-	-	75,5	-	63,5
130	-	-	-	71,0	-	55,7
134	-	-	-	67,0	-	48,7
138	-	-	-	63,0	-	42,0
140	-	-	-	61,5	-	38,5
142	-	-	-	-	-	35,5
144	-	-	-	-	35,5	32,5
146	-	-	-	-	34,0	29,5
150	-	-	-	-	31,5	23,5
152	-	-	-	-	30,0	20,5
154	-	-	-	-	29,0	-
158	-	-	-	-	26,5	-

* Main boom angle 88° · Hauptauslegerwinkel 88° · Jarret de flèche principale 88° · Inclinazione braccio base 88° · Ángulo de pluma principal 88° · Ângulo da lança principal 88° · Угол подъема гл. стрелы 88°

Main boom angle 88°, 85°, 75°, 65° and 55°, capacities for intermediate boom positions are calculated by the crane control system IC-1
Hauptauslegerwinkel 88°, 85°, 75°, 65° und 55°, Traglasten für Zwischenstellungen des Hauptauslegers werden von der Kransteuerung IC-1 berechnet
Jarret de flèche principale 88°, 85°, 75°, 65° et 55°, le système de commande de la grue IC-1 calcule les charges pour les positions intermédiaires de la flèche
Inclinazione braccio base 88°, 85°, 75°, 65° e 55°, capacità per posizioni intermedie del braccio sono calcolate dal sistema di controllo della gru IC-1
Ángulo de pluma principal 88°, 85°, 75°, 65° y 55° las capacidades para posiciones de pluma intermedias son calculadas por el sistema de control de grúa IC-1
Ângulos da lança principal 88°, 85°, 75°, 65° e 55°; as capacidades para posições da lança intermediária são calculadas pelo sistema de controle da grua IC-1
Грузоподъемность при углах подъема главной стрелы 88°, 85°, 75°, 65° и 55°, грузоподъемность в промежуточных положениях стрелы расчитывается системой управления краном IC-1

SWSL S1 / SFSL S1

295 t + 60 t ZB | 19-30 m | 10,50 m | 9.8 m/s | 360° | ISO

126 m + 60 m

	SWSL					SFSL
	0 t	0 t - 800 t				
	85°	85°	75°	65°	55°	15°
m	t	t	t	t	t	t
28	-	182,0*	-	-	-	-
30	-	180,0*	-	-	-	-
34	-	170,0*	-	-	-	-
38	79,0	189,0	-	-	-	190,0
42	69,5	183,0	-	-	-	190,0
46	61,5	174,0	-	-	-	190,0
50	54,5	164,0	-	-	-	190,0
54	48,5	154,0	-	-	-	190,0
58	43,0	144,0	-	-	-	189,0
62	38,0	134,0	-	-	-	188,5
66	34,0	125,0	-	-	-	187,5
68	32,0	120,0	186,0	-	-	187,0
70	30,0	115,0	186,0	-	-	184,5
74	-	-	185,0	-	-	179,0
78	-	-	181,0	-	-	173,0
82	-	-	177,0	-	-	166,5
86	-	-	172,0	-	-	159,0
90	-	-	166,0	-	-	148,0
92	-	-	163,0	-	-	141,0
94	-	-	-	-	-	134,5
98	-	-	-	124,0	-	121,5
102	-	-	-	117,0	-	109,5
106	-	-	-	110,0	-	98,7
110	-	-	-	104,0	-	88,5
114	-	-	-	98,5	-	79,2
118	-	-	-	-	-	70,5
122	-	-	-	-	-	61,5
124	-	-	-	-	60,5	57,0
126	-	-	-	-	58,5	53,0
130	-	-	-	-	55,0	45,0
132	-	-	-	-	53,5	41,0
134	-	-	-	-	-	37,0
138	-	-	-	-	-	29,5
140	-	-	-	-	-	26,0

126 m + 66 m

	SWSL					SFSL
	0 t	0 t - 800 t				
	85°	85°	75°	65°	55°	15°
m	t	t	t	t	t	t
30	-	166,0*	-	-	-	-
34	-	159,0*	-	-	-	-
38	-	151,0*	-	-	-	-
40	71,5	172,0	-	-	-	173,0
42	67,0	170,0	-	-	-	173,0
46	59,0	164,0	-	-	-	173,0
50	52,0	156,0	-	-	-	173,0
54	46,0	147,0	-	-	-	173,0
58	41,0	138,0	-	-	-	172,0
62	36,0	129,0	-	-	-	171,0
66	32,0	121,0	-	-	-	169,5
70	28,0	112,0	-	-	-	168,5
72	26,5	108,0	168,0	-	-	168,0
74	24,5	104,0	168,0	-	-	165,5
76	23,0	100,0	168,0	-	-	163,0
78	-	-	167,0	-	-	160,5
82	-	-	165,0	-	-	155,5
86	-	-	162,0	-	-	150,0
90	-	-	159,0	-	-	144,5
94	-	-	153,0	-	-	135,5
98	-	-	149,0	-	-	123,0
102	-	-	-	114,0	-	111,5
106	-	-	-	108,0	-	100,7
110	-	-	-	101,0	-	90,5
114	-	-	-	96,0	-	80,7
118	-	-	-	90,5	-	72,2
120	-	-	-	88,5	-	68,5
122	-	-	-	-	-	64,0
126	-	-	-	-	-	55,5
128	-	-	-	-	54,0	51,5
130	-	-	-	-	52,5	47,5
134	-	-	-	-	49,0	40,0
138	-	-	-	-	46,5	32,7
142	-	-	-	-	-	25,5
144	-	-	-	-	-	22,0

* Main boom angle 88° · Hauptauslegerwinkel 88° · Jarret de flèche principale 88° · Inclinazione braccio base 88° · Ángulo de pluma principal 88° · Ângulo da lança principal 88° · Угол подъема гл. стрелы 88°

Main boom angle 88°, 85°, 75°, 65° and 55°, capacities for intermediate boom positions are calculated by the crane control system IC-1
Hauptauslegerwinkel 88°, 85°, 75°, 65° und 55°, Traglasten für Zwischenstellungen des Hauptauslegers werden von der Kransteuerung IC-1 berechnet
Jarret de flèche principale 88°, 85°, 75°, 65° et 55°, le système de commande de la grue IC-1 calcule les charges pour les positions intermédiaires de la flèche
Inclinazione braccio base 88°, 85°, 75°, 65° e 55°, capacità per posizioni intermedie del braccio sono calcolate dal sistema di controllo della gru IC-1
Ángulo de pluma principal 88°, 85°, 75°, 65° y 55° las capacidades para posiciones de pluma intermedias son calculadas por el sistema de control de grúa IC-1
Ângulos da lança principal 88°, 85°, 75°, 65° e 55°; as capacidades para posições da lança intermediária são calculadas pelo sistema de controle da grua IC-1
Грузоподъемность при углах подъема главной стрелы 88°, 85°, 75°, 65° и 55°, грузоподъемность в промежуточных положениях стрелы расчитывается системой управления краном IC-1

NOTES TO LIFTING CAPACITY

CC 9800

Anmerkungen zu den Tragfähigkeiten · Conditions d'utilisation · Annotazioni sulle portate · Condiciones de utilización · Notas sobre capacidade de içamento · Примечания по грузоподъемности

Ratings are in compliance with ISO 4305.
Weight of hook blocks and slings is part of the load, and is to be deducted from the capacity ratings.

Consult operation manual for further details.

Note: Data published herein is intended as a guide only and shall not be construed to warrant applicability for lifting purposes. Crane operation is subject to the computer charts and operation manual both supplied with the crane.

In some instances the superlift counterweight does not lift off the ground with the indicated load.

Tragfähigkeiten entsprechen ISO 4305.
Das Gewicht der Unterflaschen, sowie die Lastaufnahmemittel, sind Bestandteile der Last und sind von den Tragfähigkeitsangaben abzuziehen.

Weitere Angaben in der Bedienungsanleitung des Kranes.

Anmerkung: Die Daten dieser Broschüre dienen nur zur allgemeinen Information; für ihre Richtigkeit übernehmen wir keine Haftung. Der Betrieb des Kranes ist nur mit den Original-Tragfähigkeitstabellen und mit der Bedienungsanleitung zulässig, die mit dem Kran mitgeliefert werden.

In einigen Fällen hebt das Superliftgegengewicht bei den angegebenen Traglasten nicht ab.

Le tableau de charges est conforme à la norme ISO 4305.
Les poids du crochet-moufle et de tous les accessoires d'élingage font partie de la charge et sont à déduire des charges indiquées.

Pour plus de détails consulter la notice d'utilisation de la grue.

Nota: Les renseignements ci-inclus sont donnés à titre indicatif et ne représentent aucune garantie d'utilisation pour les opérations de levage. La mise en service de la grue n'est autorisée qu'à condition que les tableaux de charges ainsi que le manuel de service, tels que fournis avec la grue, soient observés.

Le contrepoids du superlift ne décolle pas dans certaines configurations des tableaux de charge.

Le portate sono conformi alla norma ISO 4305.
Il peso del bozzello e delle funi d'attacco fanno parte del carico e sono quindi da detrarre dai valori di tabella.

Per ulteriori dettagli sulla velocità vento, consultare il manuale di istruzione della gru.

Nota: I dati riportati su tale prospetto sono solo a titolo indicativo e pertanto non impegnativi. L'impiego della gru è ammesso solo rispettando le tabelle originali ed il manuale di uso fornito assieme alla gru.

In alcuni casi, con il carico indicato, il contrappeso Superlift non si solleva dal suolo.

Las capacidades de carga están sujetas a las normas ISO 4305.
El peso de los ganchos y eslingas son parte de la carga y serán deducidos de las capacidades brutas.

Consultar los manuales de operación para ampliar información.

Observación: Los datos publicados son solamente orientativos y no se deben interpretar como garantía de aplicación para determinadas operaciones de elevación. La manipulación de la grúa está sujeta a las cargas programadas en el ordenador y en el manual de operaciones, ambos suministrados con la grúa.

En algunos casos, el contrapeso superlift no se eleva del suelo con la carga indicada.

Valores nominais de acordo com a ISO 4305.
O peso dos moitões e eslingas faz parte da carga e tem de ser subtraído das capacidades nominais.

Consultar manual de operação para outros detalhes.

Nota: Os dados publicados aqui destinam-se a simples orientação e não devem ser interpretdos como garantia de aplicabilidade para fins de içamento. A operação da grua depende de tabelas de computador e do manual de operação, ambos fornecidos com a máquina.

Em alguns casos, o contrapeso do Superlift não levanta do solo com a carga indicada.

Номинальные значения соответствуют ISO 4305.
Вес крюкоблока и строп является частью груза и должен вычитаться из номинальных значений грузоподъемности.

Подробности см. в руководстве по эксплуатации.

Примечание. Публикуемые в настоящем издании данные приводятся только для справки и не должны использоваться при расчете нагрузки. При эксплуатации крана должны применяться компьютерные таблицы и руководство по эксплуатации, входящие в комплект поставки крана.

В некоторых случаях противовес системы суперлифт не может быть поднят с земли с указанной нагрузкой.

SFVL

15°

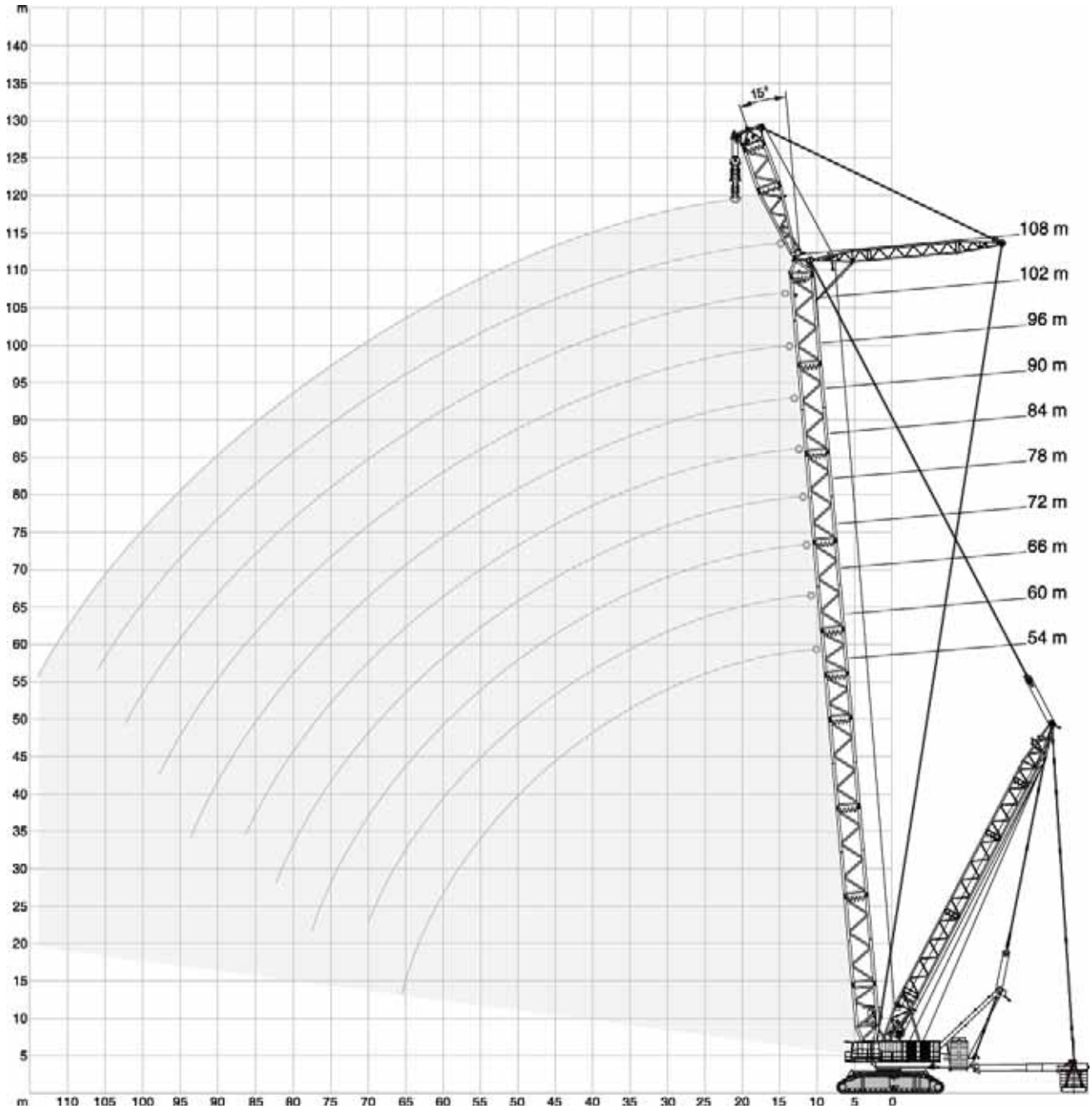

295 t + 60 t ZB | 19-30 m | 18 m | 15° | 0-800 t | 10,50 m | 9.8 m/s | 360° | ISO

m	54 m	60 m	66 m	72 m	78 m	84 m	90 m	96 m	102 m	108 m	m
	t	t	t	t	t	t	t	t	t	t	
18	1018,0	992,0	972,0	924,0	-	-	-	-	-	-	18
20	958,0	940,0	924,0	911,0	862,0	798,0	718,0	654,0	-	-	20
22	905,0	892,0	882,0	876,0	846,0	794,0	718,0	654,0	595,0	542,0	22
24	857,0	849,0	843,0	840,0	829,0	793,0	718,0	654,0	595,0	542,0	24
26	815,0	811,0	807,0	807,0	804,0	791,0	718,0	654,0	595,0	542,0	26
28	776,0	776,0	775,0	777,0	776,0	783,0	718,0	654,0	595,0	542,0	28
30	742,0	744,0	745,0	749,0	750,0	761,0	714,0	654,0	595,0	542,0	30
34	681,0	687,0	693,0	699,0	703,0	714,0	667,0	620,0	582,0	536,0	34
38	625,0	640,0	640,0	635,0	630,0	626,0	625,0	596,0	554,0	519,0	38
42	537,0	566,0	569,0	564,0	558,0	555,0	553,0	547,0	535,0	500,0	42
46	464,0	492,0	510,0	505,0	499,0	496,0	494,0	488,0	484,0	479,0	46
50	411,0	432,0	448,0	456,0	450,0	446,0	444,0	438,0	434,0	431,0	50
54	367,0	377,0	396,0	406,0	408,0	404,0	402,0	396,0	391,0	389,0	54
58	319,0	335,0	349,0	362,0	367,0	367,0	365,0	359,0	355,0	352,0	58
62	276,0	302,0	307,0	321,0	329,0	331,0	334,0	328,0	323,0	320,0	62
66	235,0	263,0	276,0	284,0	293,0	298,0	304,0	300,0	295,0	292,0	66
70	-	227,0	248,0	250,0	260,0	266,0	273,0	272,0	268,0	266,0	70
74	-	-	215,0	228,0	230,0	237,0	245,0	245,0	243,0	241,0	74
78	-	-	184,0	202,0	205,0	211,0	219,0	220,0	219,0	219,0	78
82	-	-	-	174,0	188,0	186,0	195,0	197,0	197,0	198,0	82
86	-	-	-	-	163,0	170,0	172,0	175,0	176,0	177,0	86
90	-	-	-	-	-	151,0	154,0	155,0	157,0	159,0	90
94	-	-	-	-	-	129,0	141,0	136,0	139,0	141,0	94
98	-	-	-	-	-	-	121,0	125,0	121,0	124,0	98
102	-	-	-	-	-	-	-	109,0	110,0	109,0	102
106	-	-	-	-	-	-	-	-	97,5	97,5	106
110	-	-	-	-	-	-	-	-	-	87,0	110
114	-	-	-	-	-	-	-	-	-	72,5	114
118	-	-	-	-	-	-	-	-	-	-	118

Crawler Carrier

	5-section carrier comprising carbody, two cross axles and two split-type crawler side frames. Carbody, cross axles and side frames are pin-connected hydraulically. Track width: 10.5 m.
Carbody	Bending- and torsion-resistant welded structure fabricated from high-strength fine grain structural steel. Quick-disconnect fittings (optional) facilitate removal of slew ring from carbody to minimise weight for transportation.
Cross axles	Bending- and torsion-resistant welded structure fabricated from high-strength fine grain structural steel incl. hydraulic jack legs.
Crawler side frames	Bending- and torsion-resistant welded structure fabricated from high-strength fine grain structural steel. Split-type side frames to minimise weight for transportation. Centralised lubrication included as standard.
Crawlers	Crawler pads made of heat-treated high-strength cast steel. 15 rollers per crawler with hardened rolling surfaces.
Drive	The crawlers are each driven by two hydraulic motors through closed planetary gear reduction units running in an oil bath, equipped with spring-loaded, hydraulically released holding brakes. Each crawler provides independent, infinitely variable control and counter-rotation capability. Quadro-Drive as standard.
Slew unit	Four slew gearboxes in carbody powered by hydraulic motors through closed planetary gear units running in oil bath. Spring-applied, hydraulically released holding brake and non-wearing hydraulic braking.

Superstructure

Counterweight	295 t in combination with 60 t central ballast.
Frame	Torsion-resistant welded structure fabricated from high-strength fine grain structural steel. Longitudinal beam construction to accommodate three rope drums and boom hoist. Split-type superstructure for ease of transportation.
Power and control module	Two independent drive units incl. pump distribution gearbox and pumps are contained in a separate module which is connected to the side of the superstructure. Power comes from a diesel engine type OM 502 LA. Output to DIN 70020: 380 kW (516 HP) at 2000 ^{1}/min, torque 2400 Nm at 1080 ^{1}/min. The engine complies with EUROMOT 3b, Tier 4i and CARB regulations. Pump distribution gearbox with five variable displacement axial piston pumps and gear pumps. The power and control module includes cabin, complete electrics and electric generators as standard. Fuel tank capacity: 2000 l.
Rope drums	Standard superstructure equipment includes three rope drums – hoist 1, hoist 2 and boom hoist. Rope drums powered through closed planetary gear units running in oil bath. All rope drums have hydraulically released multi-disc brakes and non-wearing hydraulic braking for load lowering. Rope ends of all drums provided with quick-connect rope end fittings. Hydraulically pinned hoists H1 and H2 (H3 optional) can be removed in order to minimise weight for transportation.
Control system	IC-1: Electronic proportional valve pilot control integrated in stored-program control system incl. diagnostics. Two colour monitors, load indicator operated via a touchscreen. Working speeds infinitely variable controlled by the lever position. Automatic power control for optimal utilisation of engine output. Standard working range limitation and ground pressure indicator.
Cabin	Spacious comfortable cab located at front end of power module. Large laminated glass for front and roof windows, computerised airconditioner as standard and self-contained hot air heater. Front console includes instrumentation and crane controls as well as two graphic displays. It can be tilted back, together with the operator seat, for an improved operator view of the boom point. Camera systems for monitoring the rope drums and SL ballast, hourmeter, load moment indicator, 2 working lights, storage cabinets and refrigerator are included as standard.
Electrical equipment	24 V system (2 batteries 12 V / 180 Ah). 3-phase alternator 24 V, 80 A. Plus 3-phase generator 400 V 50 Hz 20 kVA for airconditioner, heater, lighting and multiple use on the job site. Emergency generator 400 V 50 Hz 16 kVA.
Quick-connection	Hydraulic quick-disconnect fittings on superstructure and carrier as standard.

Optional Equipment

Counterweight carrier	The counterweight carrier with a max. total weight of 640 t is adjustable over a distance of 19 m to 25 m or 24 m to 30 m from the centre of rotation, and can be operated in the circular path ± 30° tailing and parallel travel modes. Deadweight 130 t, strips down to three components for easy transport.
Superlift counterweights	

Further options on request!

Boom Configurations

General	Tubular chord lattice structure fabricated from high-strength fine grain structural steel. Walkways on boom, jib and Superlift mast. Hydraulic pinning.
SSL	Main boom: foot section 10 m, inserts 6 m and 12 m, boom head 2 m with 2 sheave-sets. Superlift equipment. Main boom lengths: 54-108 m
SSL/LSL (SGL 108 m)	Main boom: foot section 10 m, inserts 6 m and 12 m (type 3629), tapered insert, extended by inserts 6 m and 12 m (type 3227), heavy-lift top 2 m with 1 sheave-set from main boom SSL. Superlift equipment. Main boom lengths: 114-156 m
SWSL	Main boom: same as SSL. Offset 88° to 55°. Luffing fly jib: foot section 10 m, insert 12 m (type 3629), tapered insert, inserts 6 m and 12 m, heavy-lift top 2 m with 1 sheave-set from main boom SSL. Superlift equipment. Main boom lengths: 60-108 m Jib lengths: 36-120 m
SFSL	same as SWSL. Offset fly jib 15°.
SFVL	Main boom: same as SSL. Fixed fly jib: foot section 10 m, tapered insert, heavy-lift top 2 m with 2 sheave-sets from main boom SSL. Superlift equipment. Main boom lengths: 60-108 m Jib length: 18 m Offset: 15°
+LF	Addition to: SSL/LSL. Fixed fly jib: foot section 9 m, jib top section 9 m. Main boom lengths: 114-144 m Jib length: 18 m Offset: 20°
Pinning of boom	Hydraulic assisted pinning of boom sections as standard.
Reeving winch	Mounted on superstructure as standard.
Operator aids	Electronic load indicator, hoist limit switch, limit switches for boom movements, hydraulic boom backstops, anemometer.

Superlift Configurations

Tele-SL	Mast 50 m (type 2621), counterweight tray 800 t or counterweight carrier for max. 640 t optional. Superlift radius infinitely variable during operation: 19 m to 25 m with a mast radius of 22 m and 24 m to 30 m with a mast radius of 26.4 m.

Optional Equipment

Runner 60 t	Approx. 3 m, mounts on boom head and heavy-lift top.
Hoist H3	Mounted on superstructure.

Raupenunterwagen

Der Raupenunterwagen ist 5-teilig und besteht aus einem Mittelstück, zwei Querträgern und zwei geteilten Raupenträgern. Raupenträger, Mittelstück und Querträger werden hydraulisch verbolzt.
Die Spurbreite beträgt 10,5 m.

Mittelstück Biege- und verwindungssteife Schweißkonstruktion aus hochfestem Feinkornbaustahl. Die Rollendrehverbindung sitzt am Mittelstück und ist mit Schnellspannmuttern (optional) auf einfache Weise zur Reduzierung des Transportgewichtes lösbar.

Querträger Biege- und verwindungssteife Schweißkonstruktion aus hochfestem Feinkornbaustahl mit hydraulischer Abstützung.

Raupenträger Biege- und verwindungssteife Schweißkonstruktion aus hochfestem Feinkornbaustahl. Geteilter Raupenträger zur Minimierung der Transportgewichte. Zentralschmieranlage serienmäßig.

Raupen Bodenplatten der Raupenketten aus vergütetem hochfesten Stahlguss. 15 Laufrollen je Raupe mit gehärteten Laufflächen.

Antrieb Die Raupen werden von je zwei Hydromotoren über geschlossene, ölbadgeschmierte Planetengetriebe mit federbelasteten, hydraulisch gelüfteten Haltebremsen angetrieben. Jede Seite ist stufenlos, einzeln und gegenläufig steuerbar. Quadro-Antrieb serienmäßig.

Drehwerk Vier Drehwerke im Mittelstück mit Antrieb durch Hydromotor über geschlossenes, ölbadgeschmierte Planetengetriebe. Federbelastete, hydraulisch gelüftete Haltebremse und verschleißfreie hydraulische Bremsung.

Oberwagen

Gegengewicht 295 t in Verbindung mit 60 t Zentralballast.

Rahmen Verformungssteife Schweißkonstruktion aus hochfestem Feinkornbaustahl. Die Längsträgerkonstruktion dient der Aufnahme von drei Winden und dem Einziehwerk. Aus Transportgründen ist der Oberwagen geteilt ausgeführt.

Antriebsmodul Zwei voneinander unabhängige Antriebseinheiten samt Pumpenverteiler und Pumpen sitzen in einem separaten Modul, das seitlich am Oberwagen angebaut wird.
Antriebstyp: Dieselmotor Typ OM 502 LA. Leistung nach DIN 70020: 380 kW (516 PS) bei 2000 ^{1}/min, Drehmoment 2400 Nm bei 1080 ^{1}/min. Der Motor erfüllt die EUROMOT 3b, Tier 4i und CARB-Vorschriften.
Pumpenverteilergetriebe mit fünf verstellbaren Axialkolbenpumpen und zusätzlichen Zahnradpumpen.
Im Antriebsmodul sind serienmäßig die Kabine, die gesamte Elektrik sowie die Stromerzeuger integriert.
Kraftstoffbehälter: 2000 l.

Seilwinden Der Oberwagen ist serienmäßig mit drei Seilwinden – Hubwerk 1, Hubwerk 2 und Einziehwerk – ausgerüstet. Der Antrieb der Winden erfolgt über geschlossene, ölbadgeschmierte Planetengetriebe. Alle Seilwinden sind mit hydraulisch gelüfteten Lamellenbremsen und verschleißfreier hydraulischer Bremsung für den Senkvorgang ausgerüstet. Die Seilenden aller Winden sind mit Pressfitting und Taschen ausgestattet. Zur Reduzierung der Transportgewichte sind die hydraulisch verbolzten Winden H1 und H2 (optional H3) ausbaubar.

Steuerung IC-1: Elektronische Proportionalventilvorsteuerung integriert in eine speicherprogrammierte Steuerung mit Fehlerdiagnose. Zwei Farbbildschirme, Bedienung über Touchscreen. Die Arbeitsgeschwindigkeiten werden durch die Hebelstellung stufenlos geregelt. Leistungsregelung der Antriebe zur optimalen Ausnutzung der Motorleistung. Serienmäßig Arbeitsbereichsbegrenzung und Anzeige der Bodenpressung.

Kabine Die geräumige Komfortkabine ist im vorderen Bereich des Antriebsmoduls angeordnet. Sie ist mit großzügiger Sicherheitsverglasung auch im Dachbereich, computergesteuerter Klimaanlage serienmäßig und motorunabhängiger Warmluftheizung ausgestattet. Steuer- und Kontrollelemente für die Kranfunktionen sowie zwei Grafik-Displays befinden sich in der Frontkonsole. Diese ist zur Sichtverbesserung gemeinsam mit dem Fahrersitz nach hinten neigbar. Kamerasysteme für die Überwachung von Winden und SL-Ballast, Betriebsstundenzähler, Lastmomentanzeige, 2 Arbeitsscheinwerfer, Ablageschränke und Kühlschrank serienmäßig.

Elektrische Anlage 24 V System (2 x Batterie 12 V / 180 Ah).
3-Phasen Wechselstromgenerator 24 V, 80 A.
Zusätzlich 3-Phasengenerator 400 V 50 Hz 20 KVA für Klimaanlage, Heizung, Beleuchtung und vielfältige Anwendungen auf der Baustelle.
Notstromaggregat 400 V 50 Hz 16 KVA.

Schnellverbindung Hydraulische Schnellverbindung Oberwagen und Unterwagen serienmäßig.

Zusatzausrüstung

Gegengewichtswagen Der Gegengewichtswagen mit max. 640 t Gesamtgewicht kann im Abstand von 19 m bis 25 m bzw. 24 m bis 30 m zur Drehmitte frei verstellt und in den Fahrzuständen Drehen, Hinterherfahrt und Nachlauf ± 30° betrieben werden. Eigengewicht 130 t, zum Transport in drei Komponenten zerlegbar.

Superlift-Gegengewichte

Weitere Zusatzausrüstungen auf Anfrage!

Auslegervarianten

Allgemein	Gitter-Rohrkonstruktion aus hochfestem Feinkornbaustahl. Begehungen auf Hauptausleger, Hilfsausleger und Superlift-Mast. Hydraulisch verbolzbar.
SSL	Hauptausleger: Fußstück 10 m, Zwischenstücke 6 m und 12 m, Anschlusskopf 2 m mit 2 Rollensätzen. Superlift-Einrichtung. Hauptauslegerlängen: 54-108 m
SSL/LSL (SGL 108 m)	Hauptausleger: Fußstück 10 m, Zwischenstücke 6 m und 12 m (Typ 3629), Reduzierstück, verlängert um Zwischenstücke 6 m und 12 m (Typ 3227), Schwerlastkopf 2 m mit 1 Rollensatz vom Hauptausleger SSL. Superlift-Einrichtung. Hauptauslegerlängen: 114-156 m
SWSL	Hauptausleger: wie SSL. Vorneigung 88° bis 55°. Wippbarer Hilfsausleger: Fußstück 10 m, Zwischenstück 12 m (Typ 3629), Reduzierstück, Zwischenstücke 6 m und 12 m, Schwerlastkopf 2 m mit 1 Rollensatz vom Hauptausleger SSL. Superlift-Einrichtung. Hauptauslegerlängen: 60-108 m Hilfsauslegerlängen: 36-120 m
SFSL	wie SWSL. Vorneigung des Hilfsauslegers 15°.
SFVL	Hauptausleger: wie SSL. Starrer Hilfsausleger: Fußstück 10 m, Reduzierstück, Schwerlastkopf 2 m mit 2 Rollensätzen vom Hauptausleger SSL. Superlift-Einrichtung. Hauptauslegerlängen: 60-108 m Hilfsauslegerlänge: 18 m Vorneigung: 15°
+LF	Zusätzlich zu: SSL/LSL. Starrer Hilfsausleger: Fußstück 9 m, Spitze 9 m. Hauptauslegerlängen: 114-144 m Hilfsauslegerlänge: 18 m Vorneigung: 20°
Auslegerverbolzung	Serienmäßig hydraulische verbolzbare Auslegerteile.
Einscherwinde	Serienmäßig am Oberwagen angebaut.
Sicherheitseinrichtungen	Elektronischer Lastmomentbegrenzer, Hubendschalter, Endschalter für Auslegerbewegungen, hydraulische Ausleger-Rückfallsicherungen, Windmesser.

Superlift-Konfigurationen

Tele-SL	Mast 50 m (Typ 2621), Gegengewichtstraverse 800 t oder optional Gegengewichtswagen mit max. 640 t. Superlift-Radius stufenlos im Betrieb verstellbar von 19 m bis 25 m bei Mastradius 22 m und von 24 m bis 30 m bei Mastradius 26,4 m.

Zusatzausrüstung

Runner 60 t	Ca. 3 m, anbaubar an Anschlusskopf und Schwerlastkopf.
Hubwerk H3	Wird im Oberwagen eingebaut.

Châssis à chenilles

Le porteur à chenilles est réalisé en 5 parties et se compose d'une partie centrale, de deux traverses et de deux trains de chenilles divisibles en deux parties. Les trains de chenilles, la partie centrale et les traverses sont verrouillés hydrauliquement. La voie est de 10,5 m.

Partie centrale Structure mécano-soudée rigide à la flexion et à la torsion, réalisée en acier de construction à grains fins à haute résistance. Ecrous à serrage rapide (en option) facilitant le démontage de la couronne d'orientation pour réduire les poids de transport.

Traverses Structure mécano-soudée rigide à la flexion et à la torsion, réalisée en acier de construction à grains fins à haute résistance, avec calage hydraulique.

Trains de chenille Structure mécano-soudée rigide à la flexion et à la torsion, réalisée en acier de construction à grains fins à haute résistance. Trains de chenilles divisibles pour minimiser les poids de transport. Graissage centralisé en série.

Chenilles Patins de chenilles en acier coulé trempé et revenu à haute résistance. 15 galets par chenille avec surfaces de roulement trempées.

Entraînement Les chenilles sont entraînées chacune par deux moteurs hydrauliques avec réducteurs planétaires en carter étanche sous bain d'huile, munis de freins d'arrêt à ressorts à desserrage hydraulique. Chaque côté permet un mouvement réglable sans paliers individuel et dans le sens opposé. Entraînement quadro en série.

Mécanisme d'orientation Quatre mécanismes d'orientation dans la partie centrale entraînés par moteurs hydrauliques avec réducteurs planétaires en carter étanche sous bain d'huile. Freins d'arrêt à ressorts à desserrage hydraulique et freinage anti-usure hydraulique.

Partie supérieure

Contrepoids 295 t en combinaison avec 60 t de lest central.

Charpente Structure mécano-soudée résistant à la déformation, réalisée en acier de construction à grains fins à haute résistance. Structure à longerons servant à recevoir trois treuils et le mécanisme de relevage. La partie supérieure est divisible en deux parties pour des raisons de transport.

Module de motorisation Deux unités d'entraînement indépendantes l'une de l'autre, y compris la boîte de transfert à pompes et les pompes, et de commande sont disposées dans un module séparé attaché latéralement à la partie supérieure. Type de motorisation : moteur diesel type OM 502 LA. Puissance selon DIN 70020 : 380 kW (516 CV) à 2000 ^{1}/min, couple 2400 Nm à 1080 ^{1}/min. Le moteur satisfait aux réglements EUROMOT 3b, Tier 4i et CARB. Boîte de transfert à cinq pompes à pistons axiaux à débit variable et pompes à engrenage auxiliaires. La cabine, tout le système électrique et les équipements de génération de courant sont logés de série dans le module de motorisation et de commande. Réservoir de carburant : 2000 l.

Treuils La partie supérieure est équipée de série de trois treuils – le treuil 1, le treuil 2 et le mécanisme de relevage. L'entraînement des treuils s'effectue avec réducteurs planétaires en carter étanche sous bain d'huile.
Tous les treuils sont équipés de freins à disques multiples à ressorts à desserrage hydraulique et d'un freinage anti-usure hydraulique pour la descente. Les extrémités des câbles de tous les treuils sont munies des attaches à jonction rapide. Les treuils à verrouillage hydraulique H1 et H2 (H3 en option) sont démontables pour réduire les poids de transport

Commande IC-1 : Pilotage électronique de soupapes proportionnnels intégré dans un automate programmable avec diagnostic de dysfonctionnement. Deux écrans couleur, commande du C.E.C. par écran tactile. Les vitesses de travail sont réglées sans paliers par la position du levier. Régulation automatique pour une exploitation optimale de la puissance du moteur. Limitation de portée et force de pression sur base en série.

Cabine La cabine spacieuse et confortable est placée à la partie avant du module de motorisation et de commande. Large pare-brise et toit en vitrage blindé, climatisation commandée par ordinateur de série et chauffage à air chaud indépendant du moteur. Console frontale avec éléments de commande et de contrôle pour les fonctions de la grue ainsi que deux affichages graphiques. Cette console est inclinable en arrière avec le siège conducteur, assurant au grutier une visibilité optimale. Systèmes de caméra pour surveiller les treuils et lest SL, compteur d'heures de service, affichage du moment de charge, 2 projecteurs de travail, armoires de rangement et réfrigérateur livrés de série.

Installation électrique Système 24 V (2 batteries 12 V / 180 Ah).
Génératrice à courant alternatif triphasé 24 V, 80 A.
Génératrice triphasée supplémentaire à 400 V 50 Hz 20 kVA pour la climatisation, le chauffage, l'éclairage et de multiples applications sur le chantier.
Groupe électrogène de secours 400 V 50 Hz 16 kVA.

Connexion rapide Connexion rapide hydraulique entre partie supérieure et châssis en série.

Equipements optionnels

Chariot contrepoids Le chariot contrepoids avec un poids total maxi de 640 t peut être librement ajusté sur une distance comprise entre 19 m et 25 m ou entre 24 m et 30 m du centre de rotation et peut être opéré dans les modes de déplacement du genre circulaire, marche derrière ± 30° et marche en parallèle. Poids mort 130 t, démontable en trois parties pour un transport facile.

Contrepoids Superlift

Équipements optionnels supplémentaires sur demande!

Configurations de flèche

Général	Construction tubulaire treillie en acier de haute résistance à grains fins. Passerelles sur flèche principale, volée variable et mât superlift. Verrouillage hydraulique.
SSL	Flèche principale : pied 10 m, tronçons 6 m et 12 m, tête de flèche 2 m avec 2 jeux de poulies. Equipement Superlift. Longueurs de flèche principale : 54-108 m
SSL/LSL (SGL 108 m)	Flèche principale : pied 10 m, tronçons 6 m et 12 m (type 3629), tronçon conique, allongée de tronçons 6 m et 12 m (type 3227), tête pour charges lourdes 2 m avec 1 jeu de poulie de flèche principale SSL. Equipement Superlift. Longueurs de flèche principale : 114-156 m
SWSL	Flèche principale : idem SSL. Inclinaison 88° à 55°. Fléchette à volée variable : pied 10 m, tronçon 12 m (type 3629), tronçon conique, tronçons 6 m et 12 m, tête pour charges lourdes 2 m avec 1 jeu de poulie de flèche principale SSL. Equipement Superlift. Longueurs de flèche principale : 60-108 m Longueurs de volée variable : 36-120 m
SFSL	idem SWSL. Inclinaison de fléchette 15°.
SFVL	Flèche principale : idem SSL. Fléchette fixe : pied 10 m, tronçon conique, tête pour charges lourdes 2 m avec 2 jeux de poulies de flèche principale SSL. Equipement Superlift. Longueurs de flèche principale : 60-108 m Longueur de volée variable : 18 m Inclinaison : 15°
+LF	En plus SSL/LSL. Fléchette fixe : pied 9 m, tronçon de tête 9 m. Longueurs de flèche principale : 114-144 m Longueur de volée variable : 18 m Inclinaison : 20°
Boulonnement de flèche	Boulonnement hydraulique des intercalaires de flèche en série.
Tambour de mouflage	Monté sur la partie supérieure en série.
Sécurités	Contrôleur d'état de charge électronique, contacteur de fin de course haut, limiteurs de mouvements de la flèche, retenues hydrauliques anti-basculement de la flèche, anémomètre.

Combinaisons Superlift

Tele-SL	Mât 50 m (type 2621), panier du contrepoids 800 t ou chariot contrepoids en option avec max. 640 t . Rayon du Superlift variable de 19 m à 25 m pour un rayon de mât 22 m et de 24 m à 30 m pour un rayon de mât 26,4 m.

Equipements optionnels

Potence de 60 t	Environ 3 m, montage en tête de flèche et tête pour charges lourdes.
Treuil H3	Monté sur la partie supérieure.

Carro cingolato

Carro in 5 sezioni, comprendente corpo centrale, due assali trasversali e due telai portacingoli bicomponente. La carrozzeria, gli assali trasversali e i telai portacingoli sono collegati idraulicamente mediante spine. Larghezza cingolo: 10,5 m.

Carrozzeria Struttura saldata, resistente a torsioni e flessioni, realizzata in acciaio strutturale pregiato a grana fine. Raccordi rapidi opzionali per facilitare lo smontaggio della ralla dal carro, al fine di ridurre il peso durante il trasporto.

Assali trasversali Struttura saldata, resistente a torsioni e flessioni, realizzata in acciaio strutturale ad alta resistenza a grana fine, ivi compresi i cilindri idraulici.

Telai portacingoli Struttura saldata, resistente a torsioni e flessioni, realizzata in acciaio strutturale pregiato a grana fine. Telai portacingoli bicomponente per minimizzare il peso durante il trasporto. Lubrificazione centralizzata di serie.

Cingoli Pattini realizzati in getto d'acciaio bonificato ad alta resistenza. 15 rulli per cingolo con superficie di rotolamento bonificata.

Azionamento Ciascuno dei cingoli è azionato da due motori idraulici mediante riduttori planetari in bagno d'olio, muniti di carter a tenuta e freni di arresto a molla, ad apertura idraulica. Ogni cingolo è controllabile in modo indipendente con regolazione in continuo e possibilità di controrotazione. Quadro Drive di serie.

Ralla I quattro riduttori per la ralla, nel carro, sono azionati da motori idraulici tramite riduttori planetari in bagno d'olio, dotati di carter a tenuta. Freno di arresto a molla, frenatura idraulica antiusura, con apertura idraulica.

Torretta

Contrappeso 295 t in combinazione con una zavorra centrale da 60 t.

Struttura Struttura saldata resistente a torsioni, realizzata in acciaio strutturale ad alta resistenza a grana fine. Esecuzione con longherone per alloggiare tre tamburi avvolgimento fune e l'argano del braccio. Torretta in due componenti per facilità di trasporto.

Modulo di comando e potenza Due trasmissioni indipendenti dotate di riduttore di distribuzione e relative pompe in un modulo separato, collegato al lato della torretta.
Motore diesel Tipo OM 502 LA. Potenza secondo DIN 70020: 380 kW (516 HP) a 2000 ^{1}/min, coppia 2400 Nm a 1080 ^{1}/min. Il motore è conforme alle normative EUROMOT 3b, Tier 4i e CARB. Riduttore di distribuzione per cinque pompe a pistoni assiali a cilindrata variabile e pompe a ingranaggi. Il modulo di comando e potenza include di serie i comandi in cabina, tutti i circuiti elettrici e i generatori elettrici.
Capacità del serbatoio: 2000 l.

Tamburi avvolgimento fune La dotazione standard della torretta comprende tre tamburi: argano 1, argano 2 e argano del braccio.
I tamburi sono azionati da riduttori planetari in bagno d'olio, dotati di carter a tenuta. Tutti i tamburi sono equipaggiati di freni multidisco, ad apertura idraulica e sistema di frenatura idraulica antiusura per la discesa del carico. Le estremità delle funi di tutti i tamburi sono dotate di raccordi rapidi. Gli argani H1 e H2 (H3 opzionale), con fissaggio a mezzo spine e sistema idraulico, possono essere smontati per minimizzare il peso durante il trasporto.

Sistema di comando IC-1: Valvola di regolazione proporzionale elettronica integrata nel sistema di controllo software, comprendente funzioni di diagnostica. Monitor bicolore, indicatore di carico con touch-screen. Velocità di lavoro a regolazione continua sulla base della posizione della leva. Controllo automatico dell'alimentazione, per un utilizzo ottimale della potenza erogata dal motore. Limitatore di sbraccio e indicatore di pressione al suolo di serie.

Cabina Cabina spaziosa e confortevole, ubicata sul lato anteriore del modulo di potenza. Ampio vetro stratificato per la finestra anteriore e il tetto, climatizzazione computerizzata compresa nella dotazione standard e riscaldatore aria autonomo. La console anteriore comprende la strumentazione e i comandi gru, nonché due display grafici. La cabina può essere inclinata indietro, assieme al sedile dell'operatore, per migliorare la visibilità del punto di lavoro del braccio. Sistemi videocamera per monitoraggio dei tamburi e zavorra SL, contaore, indicatore di carico, 2 fari di lavoro, ripostigli e frigorifero compresi nella dotazione standard.

Componenti elettrici Impianto 24 V (2 batterie 12 V / 180 Ah).
Alternatore a 3 fasi 24 V, 80 A.
Più generatore trifase 400 V 50 Hz 20 kVA per climatizzatore, riscaldatore, illuminazione e altre utenze sul cantiere.
Generatore di emergenza 400 V 50 Hz 16 kVA.

Raccordi rapidi Raccordi rapidi idraulici su torretta e carro di serie.

Equipaggiamento opzionale

Contrappeso carro Il carro contrappesi, con un peso max. totale di 640 t, è regolabile su una distanza da 19 m a 25 m o da 24 m a 30 m dal centro di rotazione e può essere utilizzato in percorso circolare, in posizione posteriore con spostamento laterale di ± 30° e a traslazione parallela. Carico fisso 130 t, ridotto a tre componenti per facilità di trasporto.

Contrappesi Superlift

Ulteriori opzioni su richiesta!

Configurazioni del braccio

Generale	Struttura a traliccio tubolare saldata, resistente a torsioni, realizzata in acciaio strutturale ad alta resistenza a grana fine. Passerelle su braccio base, falcone e albero Superlift. Fissaggio idraulico.
SSL	Braccio base: colonna 10 m, elementi 6 m e 12 m, testa braccio 2 m con 2 gruppi pulegge. Sistema Superlift. Lunghezza del braccio base: 54-108 m
SSL/LSL (SGL 108 m)	Braccio base: colonna 10 m, elementi 6 m e 12 m (tipo 3629), elemento conico, esteso per elementi 6 m e 12 m (tipo 3227), testa heavy-lift 2 m con 1 gruppo pulegge del modulo SSL braccio base. Sistema Superlift. Lunghezza del braccio base: 114-156 m
SWSL	Braccio base: come SSL. Inclinazione da 88° a 55°. Falcone a volata variabile: colonna 10 m, elemento 12 m (tipo 3629), elemento conico, elementi 6 m e 12 m, testa heavy-lift 2 m con 1 gruppo pulegge del modulo SSL braccio base. Sistema Superlift. Lunghezza del braccio base: 60-108 m Lunghezze falcone: 36-120 m
SFSL	come SWSL. Inclinazione falcone 15°.
SFVL	Braccio base: come SSL. Falcone fisso: colonna 10 m, elemento conico, testa heavy-lift 2 m con 2 gruppi pulegge del modulo SSL braccio base. Sistema Superlift. Lunghezza del braccio base: 60-108 m Lunghezza falcone: 18 m Inclinazione: 15°
+LF	Aggiunta a: SSL/LSL. Falcone fisso: colonna 9 m, elemento superiore falcone 9 m. Lunghezza del braccio base: 114-144 m Lunghezza falcone: 18 m Inclinazione: 20°
Fissaggio del braccio base	Fissaggio degli elementi del braccio con servocomando idraulico di serie.
Verricello di avvolgimento	Montato su torretta, di serie.
Dispositivi di sicurezza	Indicatore di carico elettronico, finecorsa argano, finecorsa per movimenti braccio, dispositivo antiretro braccio, anemometro.

Configurazioni Superlift

Tele-SL	Albero 50 m (tipo 2621), telaio contrappeso 800 t o contrappeso carro per max. 640 t opzionale. Portata Superlift a variazione infinitesimale durante il funzionamento: da 19 m a 25 m con portata albero di 22 m e da 24 m a 30 m con potata albero di 26,4 m.

Equipaggiamento opzionale

Runner 60 t	Circa 3 m, installabile sulla testa braccio e testa heavy-lift.
Argano H3	Montato su torretta.

Chasis de orugas

	Chasis de 5 secciones, formado por un cuerpo central, dos ejes transversales y dos bastidores laterales divididos para orugas. El chasis central, los ejes transversales y los bastidores laterales están unidos con pernos hidráulicos. Ancho de oruga: 10,5 m.
Cuerpo central	Estructura soldada resistente a la flexión y a la torsión, fabricada con acero de construcción de grano fino y alta resistencia. Los accesorios de desconexión rápida (opcional) facilitan el desmontaje del anillo de giro del cuerpo central para reducir al mínimo el peso de transporte.
Ejes transversales	Estructura soldada resistente a la flexión y a la torsión, fabricada con acero estructural de grano fino y alta resistencia, incl. patas hidráulicas.
Bastidores laterales de las orugas	Estructura soldada resistente a la flexión y a la torsión, fabricada con acero de construcción de grano fino y alta resistencia. Bastidores laterales divididos para reducir al mínimo el peso de transporte. Lubricación centralizada incluida de serie.
Orugas	Placas de oruga de acero de fundición templado de alta resistencia. 15 rodillos por cada oruga con superficies de rodadura endurecidas.
Tracción	Las orugas están propulsadas por dos motores hidráulicos cada una, a través de unidades reductoras de engranajes planetarios en cárter cerrado y baño de aceite, equipadas con frenos de parada accionados por muelle y soltados hidráulicamente. Cada oruga brinda un control infinitamente variable y capacidad de contrarrotación. Transmisión Quadro de serie.
Mecanismo de giro	Cuatro cajas de engranajes de giro en el cuerpo central son accionadas por motores hidráulicos a través de engranajes planetarios en cárter cerrado y baño de aceite. Freno de parada accionado por muelle y soltado hidráulicamente, y frenado sin desgaste.

Superestructura

Contrapesos	295 t en combinación con 60 t de lastre central.
Bastidor	Estructura soldada resistente a la torsión, fabricada con acero estructural de grano fino y alta resistencia. Construcción de viga longitudinal para albergar tres tambores de cable y cabrestante de pluma. Superestructura dividida para facilitar el transporte.
Módulo de alimentación y control	Dos unidades de propulsión independientes, incl. caja de engranajes de distribución de bombas y bombas albergadas en un módulo separado que está conectado con el lateral de la superestructura. Potencia proporcionada por un motor diésel tipo OM 502 LA. Potencia según DIN 70020: 380 kW (516 CV) a 2000 rpm, par motor 2400 Nm a 1080 rpm. El motor cumple con las normativas EUROMOT 3b, Tier 4i y CARB. Caja de engranajes de distribución de bombas con cinco bombas de pistón axial de desplazamiento variable y bombas de engranajes. El módulo de alimentación y control incluye cabina, sistema eléctrico completo y generadores eléctricos de serie. Capacidad del depósito de combustible: 2000 l.
Tambores de cable	El equipamiento de serie de la superestructura incluye tres tambores de cable: cabestrante 1, cabestrante 2 y cabestrante de pluma. Tambores de cable accionados a través de engranajes planetarios en cárter cerrado y baño de aceite. Todos los tambores de cable tienen frenos multidisco soltados hidráulicamente, y frenado hidráulico sin desgaste para reducir el peso. Los extremos de los cables están equipados con accesorios de conexión rápida. Los cabrestantes H1 y H2 (H3 opcional) fijados con pernos hidráulicos pueden desmontarse para reducir al mínimo el peso de transporte.
Sistema de control	IC-1: Control piloto electrónico de válvulas proporcionales integrado en un sistema de control por programa almacenado, incluido diagnóstico. Monitores de dos colores, indicador de carga operado por pantalla táctil. Velocidades de trabajo controladas en progresión continua por la posición de la palanca. Control automático de potencia para un aprovechamiento óptimo de la potencia del motor. Limitación del área de trabajo e indicador de presión sobre el terreno, de serie.
Cabina	Cabina espaciosa y confortable ubicada en la parte frontal del módulo de alimentación. Amplio vidrio laminado para luna delantera y de techo, aire acondicionado computarizado de serie y calefacción autónoma de aire caliente. La consola frontal incluye instrumentos y controles de grúa, así como dos pantallas gráficas. Puede inclinarse hacia atrás, junto con el asiento del operador, para mejorar la visibilidad de manejo de la pluma. Sistemas de cámaras para monitorizar los tambores de cable y el lastre SL, contador de horas, indicador de momento de carga, 2 luces de trabajo, armarios de almacenamiento y refrigerador incluidos de serie.
Equipamiento eléctrico	Sistema de 24 V (2 baterías de 12 V / 180 Ah). Alternador de 3 fases de 24 V, 80 A. Además, generador de 3 fases de 400 V 50 Hz, 20 kVA, para aire acondicionado, calefacción, luces y usos múltiples en el lugar de trabajo. Generador de emergencia de 400 V 50 Hz, 16 kVA.
Conexión rápida	Accesorios hidráulicos de desconexión rápida en el chasis y en la superestructura de serie.

Equipamiento opcional

Carro de contrapeso	El carro de contrapeso con un peso total de 640 t se puede ajustar libremente en una distancia de 19 m a 25 m o de 24 m a 30 m desde el centro de rotación, y puede operarse en los modos de avance de vía circular, ± 30° retrasada y paralela. El peso propio de 130 t se divide en tres componentes para un transporte sencillo.
Contrapesos Superlift	

¡Otras opciones a petición!

Configuraciones de pluma

General	Estructura tubular de celosía fabricada con acero estructural de grano fino y alta resistencia. Pasarelas en pluma, plumín y mástil Superlift. Fijación hidráulica.
SSL	Pluma principal: tramo de pie 10 m, tramos intermedios 6 m y 12 m, cabeza de la pluma 2 m con 2 juegos de poleas. Equipamiento Superlift. Longitudes de pluma principal: 54-108 m
SSL/LSL (SGL 108 m)	Pluma principal: tramo de pie 10 m, tramos intermedios 6 m y 12 m (tipo 3629), tramos reductores, extendido con tramos intermedios 6 m y 12 m (tipo 3227), cabeza de carga pesada 2 m con 1 juego de poleas desde pluma principal SSL. Equipamiento Superlift. Longitudes de pluma principal: 114-156 m
SWSL	Pluma principal: igual que SSL. Inclinable de 88° a 55°. Plumín abatible: tramo de pie 10 m, tramo intermedio 12 m (tipo 3629), tramo reductor, tramos intermedios 6 m y 12 m, cabeza de carga pesada 2 m con con 1 juego de poleas desde pluma principal SSL. Equipamiento Superlift. Longitudes de pluma principal: 60-108 m Longitudes de plumín: 36-120 m
SFSL	igual que SWSL. Ángulo de plumín 15°.
SFVL	Pluma principal: igual que SSL. Plumín fijo: tramo de pie 10 m, tramos reductores, cabeza de carga pesada 2 m con 2 juegos de poleas desde pluma principal SSL. Equipamiento Superlift. Longitudes de pluma principal: 60-108 m Longitud de plumín: 18 m Ángulos: 15°
+LF	Adicional a: SSL/LSL. Plumín fijo: tramo de pie 9 m, parte superior plumín 9 m. Longitudes de pluma principal: 114-144 m Longitud de plumín: 18 m Ángulos: 20°
Fijación de la pluma	Fijación de tramos de pluma por pernos asistidos hidráulicamente de serie.
Cabestrante pasador	Montado en superestructura de serie.
Dispositivos de seguridad	Indicador electrónico de carga, interruptor de límite de cabrestante, interruptor de límite de elevación para movimientos de pluma, retén hidráulico de pluma, anemómetro.

Configuraciones Superlift

Tele-SL	Mástil 50 m (tipo 2621), bandeja de contrapeso 800 t o carro de contrapeso para máx. 640 t opcional. Radio de Superlift en progresión continua durante la operación: 19 m a 25 m con un radio de mástil de 22 m y 24 m a 30 m con un radio de mástil de 26,4 m.

Equipamiento opcional

Runner 60 t	Aprox. 3 m, se monta en cabeza de pluma y cabeza de carga pesada.
Cabestrante H3	Montado en la superestructura.

Veículo sobre esteiras

Veículo de 5 seções formado pela torre de rotação, dois eixos transversais e dois chassis separados para as esteiras. A torre de rotação, os eixos transversais e os chassis separados são conectados por pinos de ação hidráulica. Largura das esteiras: 10,5 m.

Torre de rotação
Estrutura soldada resistente a flexão e torção fabricada com aço estrutural de granulação fina e alta resistência Conexões de desengate rápido (opcionais) facilitam a retirada do anel de giro da torre de rotação para diminuir o peso no transporte.

Eixos transversais
Estrutura soldada resistente a flexão e torção fabricada com aço estrutural de granulação fina e alta resistência incluindo as pernas do macaco hidráulico.

Estruturas laterais das esteiras
Estrutura soldada resistente a flexão e torção fabricada com aço estrutural de granulação fina e alta resistência Chassis laterais do tipo separado para diminuir o peso no transporte. Lubrificação centralizada como item de série.

Esteiras
Sapatas da esteira de aço tratado de alta resistência. 15 roletes por esteira com superfícies de rolamento temperadas.

Tração
As esteiras são comandadas por dois motores hidráulicos cada, através de caixas fechadas com engrenagens planetárias em banho de óleo, equipadas com freios de retenção com liberação hidráulica por ação de mola. Cada esteira oferece controle independente infinitamente variável e capacidade de contrarrotação. Tração quádrupla como item de série.

Unidade de giro
Quatro caixas de engrenagens na torre de giro comandadas por motores hidráulicos através de unidades planetárias fechadas em banho de óleo. Freio de retenção com liberação hidráulica por ação de mola e frenagem hidráulica sem desgaste.

Superestrutura

Contrapeso
295 t em combinação com 60 t de lastro central.

Chassi
Estrutura soldada resistente à flexão fabricada com aço estrutural de granulação fina e alta resistência. Construção sobre longarinas acomoda três tambores de cabos e o guincho da lança. Superestrutura de tipo separado facilita o transporte.

Módulo de energia e controle
Duas unidades de acionamento independentes, incluindo a caixa de engrenagens de distribuição para as bombas e as próprias bombas, ficam abrigadas em um módulo separado, que se conecta à lateral da superestrutura.
A força vem de um motor a diesel tipo OM 502 LA. Potência conf. DIN 70020: 380 kW (516 HP) a 2000 rpm, torque 2400 Nm a 1080 rpm. Os motores atendem aos regulamentos EUROMOT 3b, Tier 4i e CARB.
Caixa de engrenagens de distribuição para as bombas com cinco bombas de pistão axial com deslocamento variável e bombas de engrenagens. O módulo padrão de energia e controle inclui cabine, sistema elétrico completo e geradores. Capacidade do tanque de combustível: 2000 l.

Tambores dos cabos de aço
O equipamento padrão na superestrutura consiste de três tambores para cabos de aço – guincho 1, guincho 2 e guincho da lança. Os tambores dos cabos são tracionados por unidades fechadas de engrenagens planetárias em banho de óleo. Todos os tambores contam com freios multidisco de liberação hidráulica e frenagem hidráulica sem desgaste para a descida das cargas. As pontas dos cabos em todos os tambores estão equipadas com acessórios de engate rápido. Guinchos H1 e H2 (H3 opcional) com pinagem hidráulica podem ser removidos para diminuir o peso no transporte.

Sistema de controle
IC-1: Controle eletrônico proporcional do piloto da válvula integrado ao sistema de controle por programa armazenado incluindo diagnósticos. Dois monitores coloridos, indicador de carga operado através de tela de toque. Velocidades de trabalho infinitamente variáveis, controladas pela posição da alavanca.
Controle automático de potência para máxima utilização do rendimento do motor. Indicador de limitação do alcance de trabalho padrão e pressão sobre o solo.

Cabine
Cabine espaçosa e confortável situada na parte dianteira do módulo de potência. Vidraça laminada grande para a janela dianteira e o teto solar, ar condicionado controlado por computador como item de série e unidade autônoma de calefação. O console dianteiro contém controles da instrumentação e do guindaste além de dois mostradores gráficos. Ele pode se inclinar para trás junto com o assento do operador, melhorando sua visão da ponta da lança. Sistemas de câmeras para monitoração dos tambores de cabos e reator „slim ballast“, horímetro, indicador de momento de carga, compartimentos com tampa e refrigerador incluídos como itens de série.

Equipamentos elétricos
Sistema de 24 V (2 baterias de 12 V / 180 Ah).
Alternador trifásico de 24 V e 80 A.
Mais gerador trifásico de 400 V, 50 Hz, 20 kVA para ar condicionado, calefação, iluminação e uso múltiplo no canteiro.
Gerador de emergência de 400 V, 50 Hz, 16 kVA.

Conexão rápida
Conexões hidráulicas de desengate rápido na superestrutura e no veículo como itens de série.

Equipamentos opcionais

Veículo dos contrapesos
O veículo dos contrapesos, com peso máximo total de 640 t, pode ser regulado para distâncias de 19 a 25 m ou 24 a 30 m do centro de rotação e ser manobrado em trajetória circular de ± 30° nos modos de marcha posterior e paralela. Sobrecarga de 130 t, distribuída em três componentes para facilitar o transporte.

Contrapesos do Superlift

Outros opcionais a pedido!

Configurações de lança

Geral	Estrutura treliçada com corda tubular fabricada com aço estrutural de granulação fina e alta resistência. Passarelas na lança principal, lança auxiliar e mastro do Superlift. Pinagem hidráulica.
SSL	Lança principal: seção do pé 10 m, inserções 6 m e 12 m, cabeça da lança 2 m com moitões duplos. Equipamento Superlift. Comprimentos da lança principal: 54-108 m
SSL/LSL (SGL 108 m)	Lança principal: seção do pé 10 m, inserções 6 m e 12 m (tipo 3629), inserção cônica, alongada por inserções de 6 m e 12 m (tipo 3227), topo para carga pesada 2 m com moitão da lança principal SSL. Equipamento Superlift. Comprimentos da lança principal: 114-156 m
SWSL	Lança principal: igual à SSL. Inclinação 88° a 55°. Lança auxiliar articulada: seção do pé 10 m, suplemento 12 m (tipo 3629), suplemento cônico, suplementos de 6 m e 12 m, topo para carga pesada 2 m com 1 moitão da lança principal da SSL. Equipamento Superlift. Comprimentos da lança principal: 60-108 m Comprimentos da lança auxiliar: 36-120 m
SFSL	Igual à SWSL. Lança auxiliar articulada 15°.
SFVL	Lança principal: igual à SSL. Lança auxiliar fixa: seção do pé 10 m, inserção cônica, topo para carga pesada 2 m com 2 moitões da lança principal da SSL. Equipamento Superlift. Comprimentos da lança principal: 60-108 m Comprimento da lança auxiliar: 18 m Inclinação: 15°
+LF	Acréscimo à: SSL/LSL. Lança auxiliar fixa: seção do pé 9 m, seção de topo da lança auxiliar 9 m. Comprimentos da lança principal: 114-144 m Comprimento da lança auxiliar: 18 m Inclinação: 20°
Pinagem da lança	Pinagem hidráulica assistida das seções da lança como característica de série.
Guincho de passagem	Montada sobre superestrutura como característica de série.
Equipamentos de segurança	Indicador eletrônico de carga, chave limitadora do guincho, chaves limitadoras dos movimentos da lança, batentes hidráulicos da lança, anemômetro.

Configurações da Superlift

Tele-SL	Mastro 50 m (tipo 2621), base dos contrapesos 800 t ou veículo dos contrapesos para máx. 640 t opcional. Raio da Superlift infinitamente variável durante a operação: 19 m a 25 m com raio do mastro de 22 m e 24 m a 30 m com raio do mastro de 26,4 m.

Equipamentos opcionais

Runner 60 t	Aprox. 3 m, monta na cabeça da lança e topo para carga pesada.
Guincho H3	Montado na superestrutura.

ГУСЕНИЧНОЕ ШАССИ

5-секционное шасси крана с кузовом, двумя поперечными осями и двумя разборными боковыми рамами гусениц. Кузов, поперечные оси и боковые рамы гусениц соединяются штифтами с помощью гидравлики. Ширина колеи: 10,5 м

Кузов Сварная конструкция из устойчивой к изгибу и кручению высокопрочной мелкозернистой конструкционной стали. Быстроразъемные фитинги (опция) облегчают снятие опорно-поворотного круга кузова для снижения веса при транспортировке.

Поперечные оси Сварная конструкция прочная на изгиб и скручивание, изготовленная из высокопрочной мелкозернистой конструкционной стали, включающая опоры гидравлических домкратов.

Боковые стенки шасси Сварная конструкция из устойчивой к изгибу и кручению высокопрочной мелкозернистой конструкционной стали. Разъемные боковые рамы гусениц для уменьшения веса при транспортировке.
Система централизованной смазки входит в стандартную комплектацию.

Гусеницы Звенья гусеничной цепи сделаны из закаленной высокопрочной литой стали. 15 катков с закаленной поверхностью качения на каждую гусеницу.

Привод Каждая гусеница приводится в движение двумя гидравлическими двигателями через планетарный редуктор в закрытом корпусе с масляной ванной, каждый двигатель имеет подпружиненный гидравлический тормоз-замедлитель. Управление гусеницами независимое с бесступенчатой регулировкой и с режимом противовращения. Квадропривод в стандартной комплектации.

Поворотный механизм Четыре коробки передач поворотного механизма, приводимого в движение гидравлическими двигателями через планетарный редуктор в закрытом корпусе с масляной ванной. Подпружиненный тормоз с гидроусилителем и неизнашивающийся гидравлический тормоз.

НАДСТРОЙКА

Противовес 295 т с учетом 60 т центрального балласта.

Рама Сварная конструкция прочная на изгиб и скручивание, изготовленная из высокопрочной мелкозернистой конструкционной стали. Продольная балочная конструкция для размещения трех тросовых барабанов и лебедки стрелы. Разборная надстройка для облегчения транспортировки.

Блок силового агрегата и управления Два независимых привода, включающие раздаточную коробку насосов и насосы, находятся в отдельном модуле, соединенном с боковой стороной надстройки.
Источником энергии для приводов служит дизельный двигатель типа OM 502 LA. Мощность по стандарту DIN 70020: 380 кВт (516 л.с.) при 2000 об/мин, вращающий момент 2400 Нм при 1080 об/мин. Двигатель соответствует требованиям стандартов EUROMOT 3b,Tier 4i и CARB. Раздаточная коробка насосов с пятью поршневыми насосами с регулированием объема и шестеренными насосами. Блок силового агрегата и управления в стандартной комплектации включает кабину, полный комплект электрического оборудования и электрические генераторы. Емкость топливного бака: 2000 l.

Канатные барабаны Стандартный набор оборудования надстройки включает три тросовых барабана – лебедок 1 и 2 и лебедки стрелы. Усилие на тросовые барабаны передается через планетарные редукторы в закрытом корпусе с масляной ванной. Все тросовые барабаны оборудованы многодисковыми гидравлическими тормозами и неизнашивающимися гидравлическими тормозами для управления опусканием груза. Концы тросов на всех барабанах имеют быстроразъемные соединительные концевые фитинги. Лебедки H1 и H2 (H3 - опция) соединяются штифтами при помощи гидравлики и для снижения веса при перевозке могут сниматься.

Система управления IC-1: Заложенная в установленную программу управления, включающую диагностику, система электронного пропорционального управления через регулирующие клапаны. Два цветных монитора, индикатор нагрузки, управляемый через сенсорный экран. Бесступенчатая регулировка рабочих скоростей изменением положения рычага. Автоматическая регулировка мощности для оптимизации выходной мощности двигателя. Ограничитель рабочего диапазона и индикатор давления на грунт входя в стандартную комплектацию.

Кабина Просторная удобная кабина расположена в передней части блока силового агрегата. Стандартная комплектация включает большие окна из многослойного стекла спереди и сверху, управляемую компьютером систему кондиционирования и автономный воздушный обогреватель. Передняя консоль включает приборы и органы управления краном, а также два графических дисплея. Она откидывается назад вместе с сиденьем оператора для улучшения обзора конца стрелы. Система видеокамер для контроля тросовых барабанов и балласта SL (системы суперлифт), счетчик наработки часов, индикатор момента нагрузки, 2 рабочих прожектора, отсеки для вещей и холодильник входят в стандартную комплектацию.

Электрическое оборудование Система с напряжением 24 В (2 аккумулятора 12 В/180 А-ч).
3-фазный генератор переменного тока, 24 В, 80 А.
плюс 3-фазный генератор переменного тока 400 В, 50 Гц, 20 кВА для питания кондиционера, обогревателя, освещения и для использования для других целей на рабочей площадке.
Аварийный генератор 400 В, 50 Гц, 16 кВА.

Быстроразъемное соединение Гидравлические быстроразъемные фитинги на надстройке и шасси в стандартной комплектации.

ДОПОЛНИТЕЛЬНОЕ ОБОРУДОВАНИЕ

Платформа для перевозки противовесов Тягач с платформой для перевозки противовесов с макс. общей грузоподъемностью 640 т регулируется по длине с вариантами 19-25 м или 24-30 м от оси сочленения и может проходить поворот с заносом хвостовой части ± 30° от прямой, двигаясь параллельно дороге. Собственная масса 130 т, для облегчения транспортировки разбирается на три части.

Противовесы системы суперлифт

Дополнительные опции на заказ!

КОНФИГУРЦИИ СТРЕЛЫ

Общая	Решетчатая трубная конструкция, изготовленная из высокопрочной мелкозернистой конструкционной стали. Ступеньки на мачтах главной стрелы, вспомогательной стрелы и системы суперлифт. Гидравлическая система соединения штифтами.
SSL	Главная стрела: нижняя секция 10 м, вставки 6 и 12 м, головка стрелы 2 м с 2 комплектами шкивов. Оборудование суперлифт. Главная стрела: 54-108 м
SSL/LSL (SGL 108 м)	Главная стрела: нижняя секция 10 м, вставки 6 и 12 м (тип 3629) сужающаяся вставка, удлиненная вставками 6 и 12 м (тип 3227), головка для тяжеловесов 2 м с 1 комплектом шкивов от основной стрелы SSL. Оборудование суперлифт. Главная стрела: 114-156 м
SWSL	Главная стрела: идентична SSL. Угол смещения 88°-55°. Стрела с изменяемым вылетом и гуськом нижняя секция 10 м, вставка 12 м (тип 3629), сужающаяся вставка, вставки 6 и 12 м, головка для тяжеловесов 2 м с 1 комплектом шкивов от основной стрелы SSL. Оборудование суперлифт. Главная стрела: 60-108 м Длина вспомогательной стрелы: 36-120 м
SFSL	идентична SWSL. Угол смещения гуська 15°.
SFVL	Главная стрела: идентична SSL. Неподвижная стрела с изменяемым вылетом: нижняя секция 10 м, сужающаяся вставка, головка для тяжеловесов 2 м с 2 комплектами шкивов от главной стрелы SSL. Оборудование суперлифт. Главная стрела: 60-108 м Длина вспомогательной стрелы: 18 м Угол смещения: 15°
+LF	Добавление к: SSL/LSL. Неподвижная стрела с изменяемым вылетом: нижняя секция 9 м, верхняя секция вспомогательной стрелы 9 м. Главная стрела: 114-144 м Длина вспомогательной стрелы: 18 м Угол смещения: 20°
Соединение штифтами стрелы	Гидравлическая система соединения штифтами главной стрелы в стандартной комплектации.
Запасовочная лебедка	Устанавливается на надстройке в стандартной комплектации.
Вспомогательные приборы управления	Электронный индикатор нагрузки, ограничитель лебедки, ограничители движения стрелы, гидравлические ограничители обратного хода стрелы, анемометр.

КОНФИГУРАЦИИ СИСТЕМЫ СУПЕРЛИФТ

Tele-SL	Мачта 50 м (тип 2621), платформа тягача для перевозки противовесов 800 т или платформа тягача для перевозки противовесов на макс. вес 640 т в качестве дополнительной опции. Бесступенчатая регулировка радиуса системы суперлифт во время работы: 19-25 м с радиусом мачты 22 и 24 м и 24-30 м с радиусом мачты 26,4 м.

ДОПОЛНИТЕЛЬНОЕ ОБОРУДОВАНИЕ

Подвижной блок на 60 т	Приблизительно 3 м, устанавливается на головку главной стрелы и головку для тяжеловесов.
Лебедка H3	Установлена на надстройке.

Effective Date: March 2012.
Product specifications and prices are subject to change without notice or obligation. The photographs and/or drawings in this document are for illustrative purposes only. Refer to the appropriate Operator's Manual for instructions on the proper use of this equipment. Failure to follow the appropriate Operator's Manual when using our equipment or to otherwise act irresponsibly may result in serious injury or death. The only warranty applicable to our equipment is the standard written warranty applicable to the particular product and sale and Terex makes no other warranty, express or implied. Products and services listed may be trademarks, service marks or trade-names of Terex Corporation and/or its subsidiaries in the USA and other countries. All rights are reserved. Terex® is a registered trademark of Terex Corporation in the USA and many other countries.

Gültig ab: März 2012.
Produktbeschreibungen und Preise können jederzeit und ohne Verpflichtung zur Ankündigung geändert werden. Die in diesem Dokument enthaltenen Fotos und/oder Zeichnungen dienen rein anschaulichen Zwecken. Anweisungen zur ordnungsgemäßen Verwendung dieser Ausrüstung entnehmen Sie bitte dem zugehörigen Betriebshandbuch. Nichtbefolgung des Betriebshandbuchs bei der Verwendung unserer Produkte oder anderweitig fahrlässiges Verhalten kann zu schwerwiegenden Verletzungen oder Tod führen. Für dieses Produkt wird ausschließlich die entsprechende, schriftlich niedergelegte Standardgarantie gewährt. Terex leistet keinerlei darüber hinaus gehende Garantie, weder ausdrücklich noch stillschweigend. Die Bezeichnungen der aufgeführten Produkte und Leistungen sind gegebenenfalls Marken, Servicemarken oder Handelsnamen der Terex Corporation und/oder ihrer Tochtergesellschaften in den USA und anderen Ländern. Alle Rechte vorbehalten. „TEREX“ ist eine eingetragene Marke der Terex Corporation in den USA und vielen anderen Ländern.

Date d'effet : Mars 2012.
Les spécifications et prix des produits sont sujets à modification sans avis ou obligation. Les photographies et/ou dessins contenus dans ce documents sont uniquement pour illustration. Veuillez vous référer à la notice d'utilisation appropriée pour les instructions quant à l'utilisation correcte de cet équipement. Tout manquement au suivi de la notice d'utilisation appropriée lors de l'utilisation de notre équipement ou tout acte autrement irresponsable peut résulter en blessure corporelle sérieuse ou mortelle La seule garantie applicable à notre équipement est la garantie standard écrite applicable à un produit et à une vente spécifique. Terex n'offre aucune autre garantie, expresse ou explicite. Les produis et services proposés peuvent être des marques de fabrique, des marques de service ou des appellations commerciales de Terex Corporation et/ou ses filiales aux Etats Unis et dans les autres pays, et tous les droits sont réservés. «TEREX» est une marque déposée de Terex Corporation aux Etats Unis et dans de nombreux autres pays.

Data di inizio validità: Marzo 2012.
Ci riserviamo il diritto di modificare le specifiche e i prezzi dei prodotti in ogni momento e senza preavviso. Le fotografie e/o i disegni contenuti in questo documento sono destinati unicamente a scopi illustrativi. Consultare le istruzioni sull'uso corretto di questo macchinario, contenute nell'opportuno Manuale dell'operatore. L'inottemperanza delle istruzioni contenute nel Manuale dell'operatore del macchinario e altri comportamenti irresponsabili possono provocare gravi lesioni, anche mortali. L'unica garanzia applicabile ai nostri macchinari è la garanzia scritta standard applicabile al particolare prodotto e alla particolare vendita; Terex è esonerata dal fornire qualsiasi altra garanzia, esplicita o implicita. I prodotti e servizi elencati possono essere dei marchi di fabbrica, marchi di servizio o nomi commerciali di TEREX Corporation e/o società affiliate negli Stati Uniti d'America e altre nazioni e tutti i diritti sono riservati. „TEREX“ è un marchio registrato di Terex Corporation negli USA e molti altri Paesi.

Fecha efectiva: Marzo 2012.
Los precios y las especificaciones de productos pueden sufrir cambios sin aviso previo u obligación. Las fotografías o dibujos de este documento tienen un fin meramente ilustrativo. Consulte el manual de instrucciones del operador correspondiente para más información sobre el uso correcto de este equipo. El hecho de no respetar el manual del operador correspondiente al utilizar el equipo o actuar de forma irresponsable puede suponer lesiones graves o fatales. La única garantía aplicable a nuestro equipo es la garantía escrita estándar correspondiente a cada producto y venta, y TEREX no amplía dicha garantía de forma expresa o implícita. Los productos y servicios mencionados pueden ser marcas registradas, marcas de servicio o nombres de marca de TEREX Corporation o de sus filiales en Estados Unidos de América y otros países, y se reservan todos los derechos. „TEREX“ es una marca comercial registrada de Terex Corporation en Estados Unidos de América y muchos otros países.

Data de vigência: Março 2012.
Especificações e preços dos produtos sujeitos a alteração sem aviso prévio ou obrigações. As fotografias e/ou desenhos deste documento servem apenas para fins ilustrativos. Consulte o respectivo Manual de Instruções para instruções sobre o uso correto deste equipamento. A falta de atenção ao respectivo Manual do Operador no uso de nosso equipamento ou a operação da máquina em condições impróprias pode resultar em lesão grave ou morte. A única garantia aplicável aos nossos equipamentos é a garantia padrão por escrito, aplicável ao produto específico e à sua venda, sem que nenhuma outra, expressa ou implícita, seja oferecida pela Terex. Os produtos e serviços listados podem ser marcas comerciais, marcas de serviço ou nomes-fantasia da Terex Corporation e/ou suas subsidiárias nos EUA e em outros países. Todos os direitos reservados. Terex® é marca registrada da Terex Corporation nos EUA e muitos outros países.

Вступает в силу: Март 2012 г.
Технические характеристики и цены могут изменяться без предварительного уведомления и без каких-либо обязательств для производителя. Фотографии и (или) чертежи, использованные в документе, приведены исключительно в качестве иллюстраций. Инструкции по правилам эксплуатации даются в соответствующих руководствах для операторов данного оборудования. Невыполнение рекомендаций руководства по эксплуатации нашего оборудования или другие безответственные действия могут повлечь серьезные травмы или смерть. Единственной гарантией, действующей в отношении нашего оборудования, является стандартная форма письменной гарантии на данный тип оборудования и на условия его продажи.

Terex Cranes, Global Marketing, Dinglerstraße 24, 66482 Zweibrücken, Germany
Tel. +49 (0) 6332 830, Email: info.cranes@terex.com, www.terexcranes.com

www.terexcranes.com

Brochure Reference: TC-DS-M-E/F/G/I/S/P/R-CC 9800–03/12

TEREX®

WORKS FOR YOU.™