dzwigi24.pl

PPM

Discovering the new truck cranes

C 330 - C 380 - C 580

PERFORMANCE - SAFETY - SERVICE - ECONOMY

dzwigi24.pl

imp. Gaillard - Digoin (85) 53.16.45

Poclain
mobile cranes
PPM

SIREN 726 820 236
HEAD OFFICE :
LA SAULE 71300 MONTCEAU-LES-MINES
COMMERCIAL DEPARTMENT :
11, VILLA DE SAXE - 75007 PARIS
TEL. : 567.35.25 - TELEX 250 725

PPM The new range

dzwigi24.pl

PPM	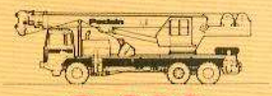 C 330	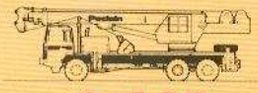 C 380	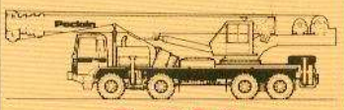 C 580
Max. Capacity (at 3 m/360°)	**30 T** (75 %) **32 T** (85 %)	**35 USt** (85 %)	**45T - 50T - 55USt** (75 %) (85 %) (85 %)
PPM Carrier	Standard : **6 x 4** ● Optional : **6 x 6**	Standard : **6 x 4** ● Optional : **6 x 6**	Standard : **8 x 4** ● Optional : **8 x 6**
	Front and Rear wheels 1200 x 20 with spare wheel		
Engine	**Diesel DEUTZ** BF 6L 413 FR – 240 HP DIN – (177 kw) **Turbo charged**		**Diesel DEUTZ** BF 6L 413 FRC 270 HP DIN (199 kw) **Turbo charged and intercooler**
Transmission	ZF synchr. gear box + Overdrive (12 speeds) + 2 range transfer box		
Equipment Standard boom	Base (8.60 m) + **2 sections**	Base (9.80 m) + **2 sect. + 1 extension**	Base (10 m) + **3 sections**
	Synchronized hydraulic telescope		
● Options	• Manual extension 5 m • Lattice ext. 8.5 m • Jib 4.70 m (0°-20°) **Total : 38,30 m**	• Lattice ext. 8.5 m • Jib 4.70 m (0°-20°) **Total : 45,20 m**	• Lattice ext 9-12-16 m • Jib 4.70 m (0°-20°) **Total : 51,45 m**
Winches ● Main ● Auxiliary (opt.)	**PPM Winch - 2 speeds** (Motor 54.8 cc - R = 1/25,5) - id° - Main winch		**PPM Winch - 3 Sp.** (Motor 80 cc - R = 1/32,4) PPM Winch - 2 Sp. (54.8 cc - R = 1/25,5)
Other options	● TELMA electric retarder ● Safe load indicator ● Three dead turn safety device ● Climatic options		

# of truck cranes PPM

dzwigi24.pl

Performances – Safety

Lifting :

- Full 360° lifting without additional front jack. Extra wide stabilizing area.
- Full telescoping duties - out or in - for all derricking angles.
- Two speeds on winches, boom derricking and telescoping. Simultaneous motions.

Mobility on road and site :

- High power/weight ratio from 7 to 8 HP/t. Three seater comfortable cab. Maximum speed 80 km/h (50 m.p.h.).
- Fully synchronized gear box with overdrive (12 speeds) and 2 speed range transfer box (road and site). Rear axles differential lock.
- Ground clearance from 373 to 505 mm. 27°/25° approach and departure angles.

Safety :

- Brake circuits, steering and road lights in compliance with EEC regulations. Emergency steering pump.
- Non return check valves, pressure limiters, speed limiters on main hydraulic functions. Block to block limit switch.
- Safe load indicator (optional).

Service

- Specific PPM carriers. Full warranted service on both upperstructure and carrier.
- Modular-type sub assemblies. International reputable components. Common parts.
- Single telescoping boom ram without internal hoses. Life-lubricated guide bearings. Negative boom angle.

Economy

- Turbo charged DEUTZ engines + 12 speed gear box with overdrive = low fuel consumption. Optimum altitude performance.
- Widely used High Pressure : piston type = main pump and winch motors minimum wear, minimum hydraulic oil capacity, maximum performance.
- Optional TELMA electric retarder : brakes maintenance cost reduced to one fourth.

dzwigi24.pl

On road : power and spe

- Power output : C330 and C380 240 HP DIN (177KW) TURBO
  C580 270 HP DIN (199KW)TURBO
- Maximum speed : 80 km/h (50 mph)

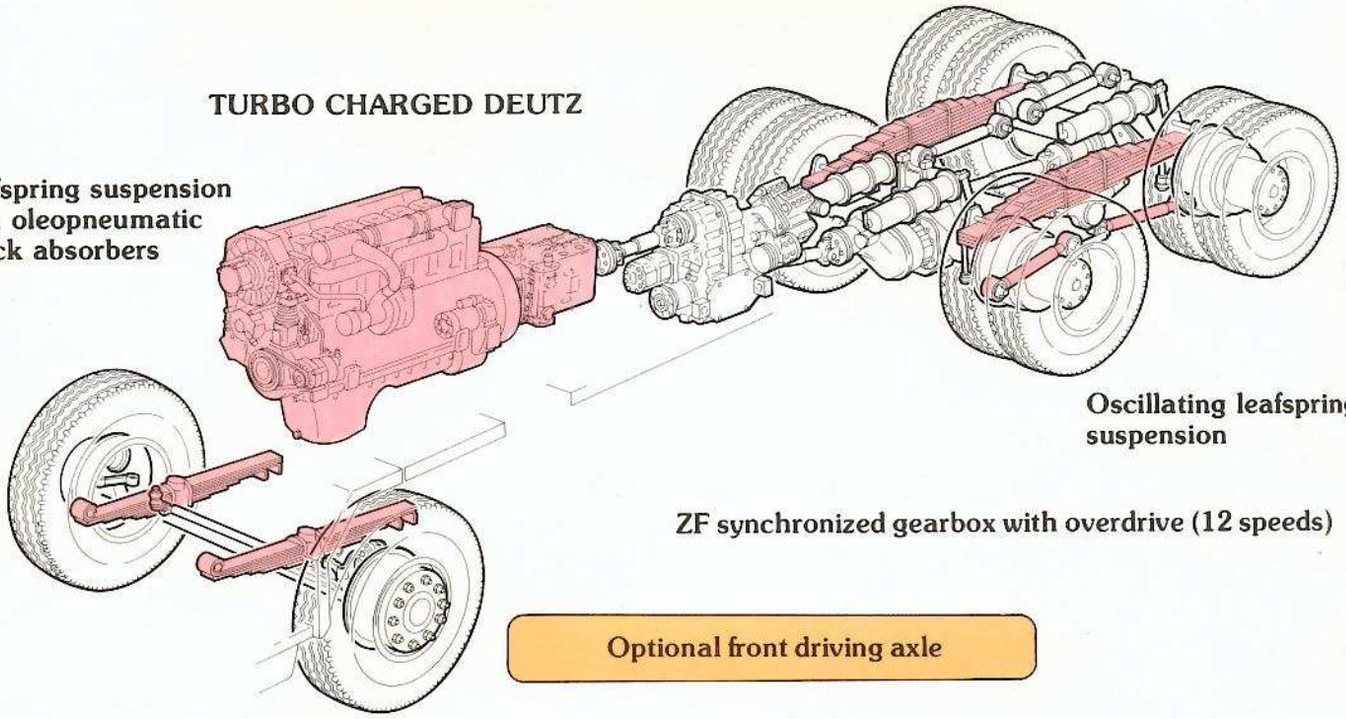

80 km/h... mobility

- A truck-mounted crane is required to move from one site to another or to travel long distances by road. For this purpose, PPM road cranes are designed and fitted with a transmission system, using exceptionally high-performance components, and are among the fastest and most powerful road cranes in their class.

... Power

- Turbo charger considerably increases DEUTZ engine Power output (by 20 to 35 %). With a power/weight ratio of 7 to 9 hp/T, they can easily reach 81,2 km/h (50.75 mph).

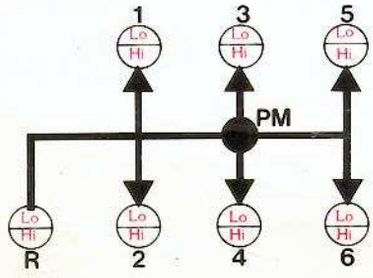

... and so smooth

- The ZF synchronized gearbox offers smooth driving, without the need of double declutching, with an overdrive providing 12 speeds. The overdrive with lever pre-selection, is controlled by action on the clutch pedal. The driver can select whether to go up through the six basic gears or, at any time, to use the next intermediate gear. These numerous combinations offers and economic operating range adapted to the ground profile and, at the same time, guarantee good acceleration.

dzwigi24.pl

On site : the go-anywhere

- Front drive axle (option 6 x 6 or 8 x 6).
- Rear differential locks.
- Continuous gradeability : 40 %.

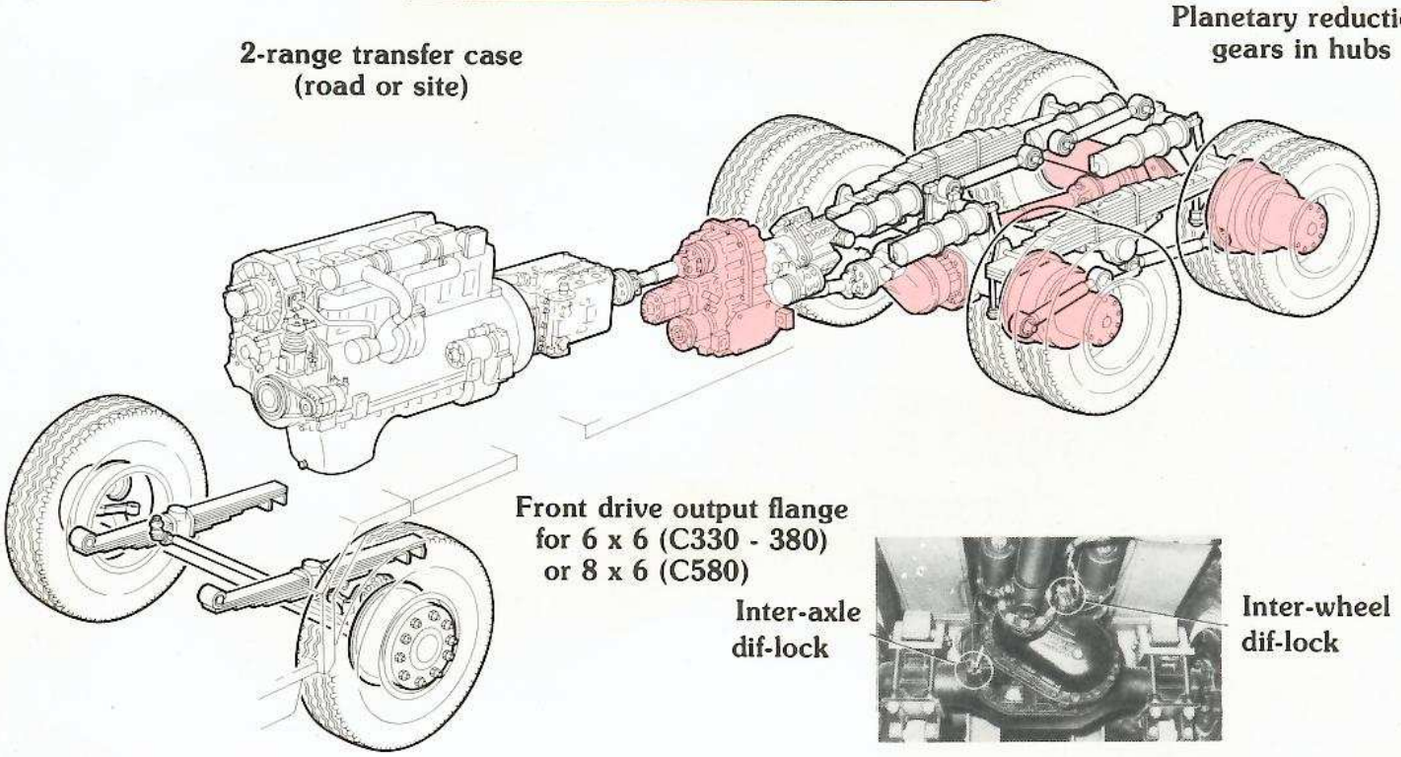

Optional front drive axle

PPM road cranes also have rough-terrain capabilities for easy travel over tracks or mountain roads, climbing of gradients and crossing rough ground.

- **Specially adapted components**

The 2-range transfer case offers a range designed specifically for site work while providing a transmission outlet for the front drive axle option.

In case of loss of grip, rear dif-locks can be operated by a simple touch on the control panel. Second planetary reduction in hubs ensures efficient protection of axle half-shafts.

Entering sites is made easy by the ZF power steering and the short turning circle, which offer great manœuvrability on narrow or congested sites.

The lower profile of a rough-terrain crane

The main figures shown here prove the outstanding rough terrain ability of the chassis.

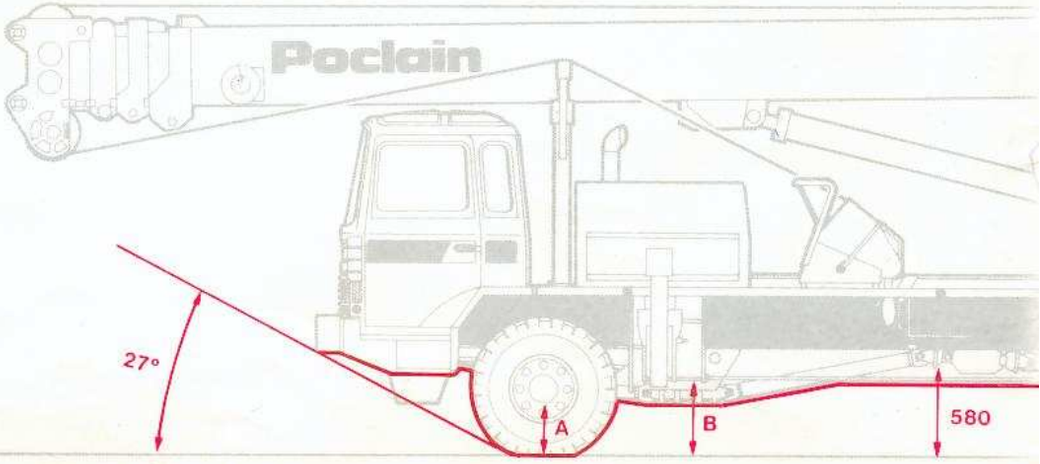

dzwigi24.pl

ed - comfort and safety

- Comfort : 3-seater cab - front and rear suspension
- Safety : EEC-approved braking, steering and lighting systems

"Motor car" comfort

- **The 3-seater front cab** offers the PPM driver maximum comfort for long-distance driving. The cab is sprung on 3 points to absorb vibrations and is complementary to the suspension system; the seat is multi positional and can be adjusted for maximum driver comfort, all-round visibility is offered by the large window area (2 sq. metres) provided by the large windscreen, side and rear windows.
- Comfort is also provided by the exceptional interior finish, with lining on roof and doors and rubber floor matting.

- **The instrument panel** is very comprehensive with all the controls at the driver's fingertips. Add to this the radio/cassette player, fitted as standard, and you have an idea of what facilities these great road runner cranes have to offer. You have to drive a PPM road crane to appreciate the difference.

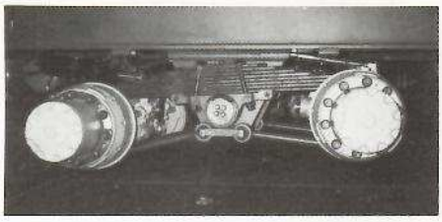

- **Front and rear suspension** through leafsprings (plus oleopneumatic shock-absorbers on the front) ensures driver's comfort with safe and efficient braking on all wheels.

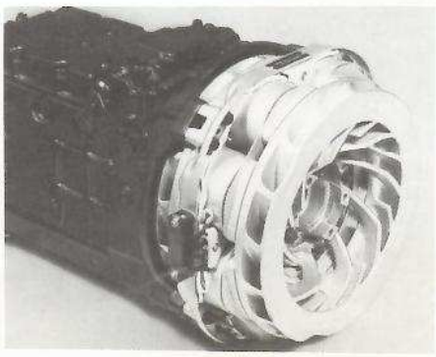

- The **EEC-approved brake circuit** supported by if required, by a TELMA electromagnetic brake. A simple touch on the control lever located on the dashboard is sufficient to replace the brakes when slowing down, thus avoiding overheating and loss of braking efficiency.

crane - quickly operational

dzwigi24.pl

- Ground clearance : up to 580 mm.
- Extra-wide independent outriggers.
- Fast-erecting extensions and fly-jib.

Timesaving is important for a lifting specialist. Once on site, non productive dead time must be reduced to a minimum. PPM road cranes are designed to be "set up" fast.

Outriggers : fast and safe

With a central outrigger control at the rear of the chassis, movements around the machine are no longer necessary. From just one control point, the operator directly controls stabilizing operations, with a clear view of both sides of the chassis. Correct levelling is ensured by a bubble level below the controls.

Fast erecting extensions

Boom extensions are quickly operational thanks to the negative derricking angle wich allows the boom to be lowered below the horizontal and the lattice sections to be swung around in a few minutes.

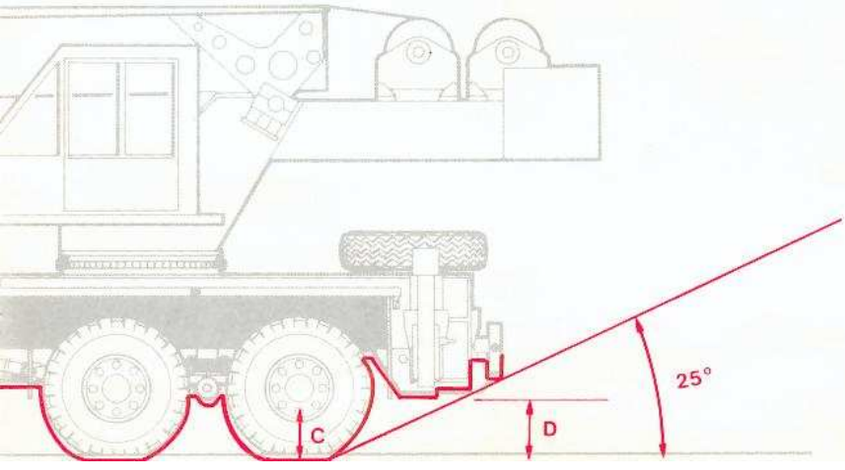

	Front	Rear
Angles	27°	25°

6

GROUND CLEARANCE (mm)

A	B	Centre	C	D
450 (6x4-8x4) 382 (6x6-8x6)	505	580	373	505

dzwigi24.pl

Chassis : maximum lo

The largest stabilizing area
C 330 - C 380 : 5.6 m x 6.3 m
C 580 : 6.8 m x 6.85 m

Have a look at the front outrigger position and you will understand at once why PPM road cranes offer the largest stabilizing area in their class and, consequently, an outstanding stability. The extension beams are more than adequately dimensioned and, in order to comply with the standard width of traffic regulations (2.5 m), the C 580 is fitted with double telescopic beams.

- **No longer preferential lifting duties on rear.**
- **Maximum duties through 360°.**

Such is the enormous advantage offered by this new stabilizing concept for truck-mounted cranes.

Although lifting capacity is still higher at the rear, it is now also possible through 360°, continuously, i.e. without having to redeposit the load or shorten the radius during rotation. And this is all done without the need of a 5th front jack. For the operator, no more hesitation about whether to lift on rear, front or side. Just one load chart to consult. This is maximum performance coupled with simple and safe operating.

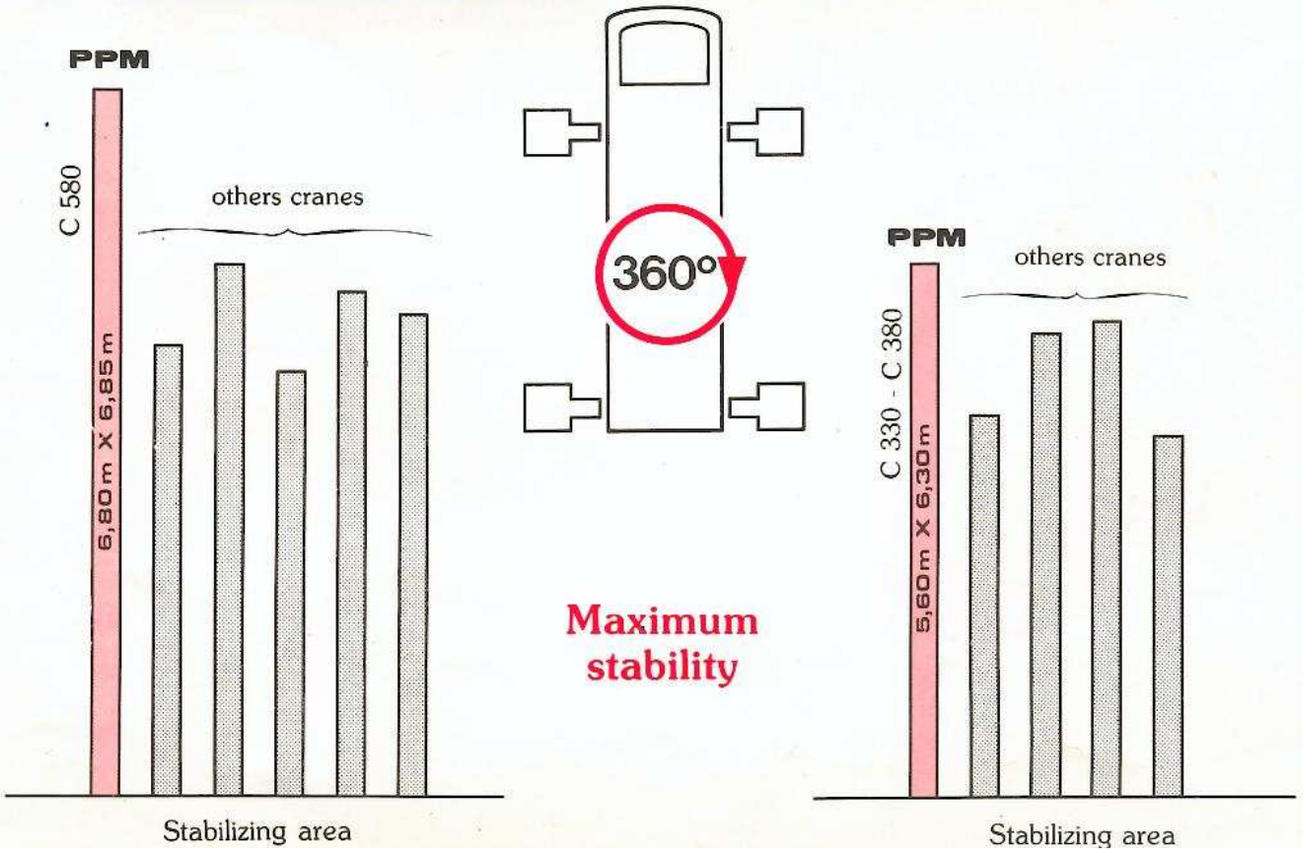

7

ads all round the crane

No more front jack.

The front outriggers are mounted as close as possible to the front axle.

dzwigi24.pl

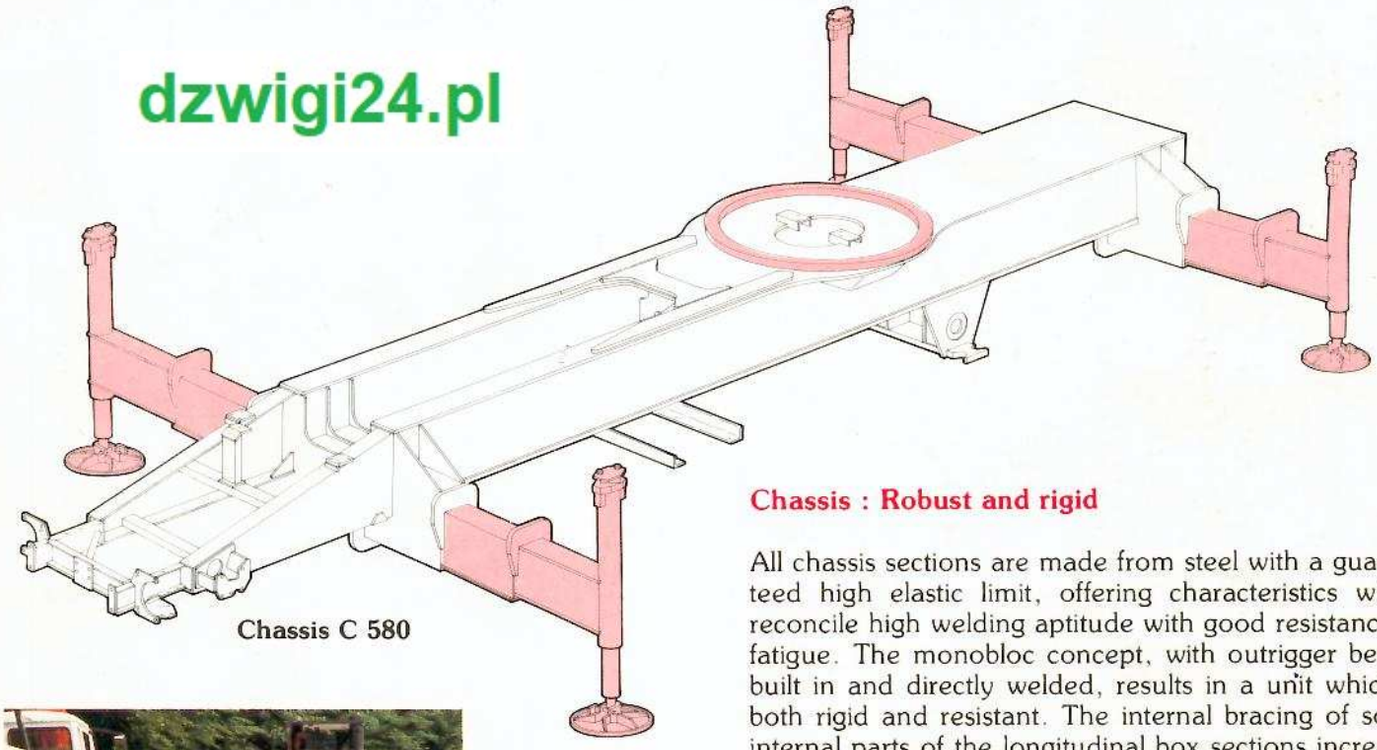

Chassis C 580

Chassis : Robust and rigid

All chassis sections are made from steel with a guaranteed high elastic limit, offering characteristics which reconcile high welding aptitude with good resistance to fatigue. The monobloc concept, with outrigger beams built in and directly welded, results in a unit which is both rigid and resistant. The internal bracing of some internal parts of the longitudinal box sections increases even more the torsional strength.

The slewing support is precision machined to guarantee the quality and regularity of the slewing-ring contact and is connected by bolts.

Overall weight remains low so as not to affect road performance and to lighten loads on the axles.

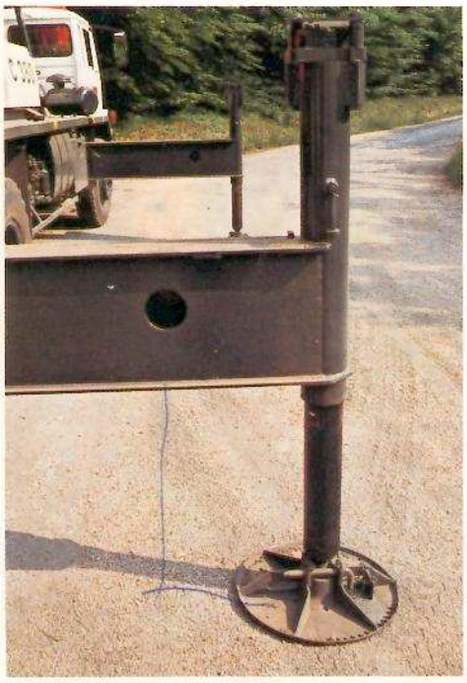

Vertical jacks : 650 mm stroke

Vertical blocking by means of inverted jacks ensures total protection of the rods inside sleeves and offers maximum ground clearance below the beams.

The 650 mm stroke of these jacks facilitates crane-levelling on uneven ground.

For safety purposes, hydraulic check valves lock the 2 vertical-jack chambers and a cap ensures their protection. On the road, a safety mechanical lock prevents any uncontrolled beam extension.

dzwigi24.pl

Telescoping with load :

Maximum telescoping capacity : (extension and retraction)
- **C 330 : 15,5 T**
- **C 380 : 20 T**
- **C 580 : 30 T**

- **High load/weight ratios** (85% /360°)

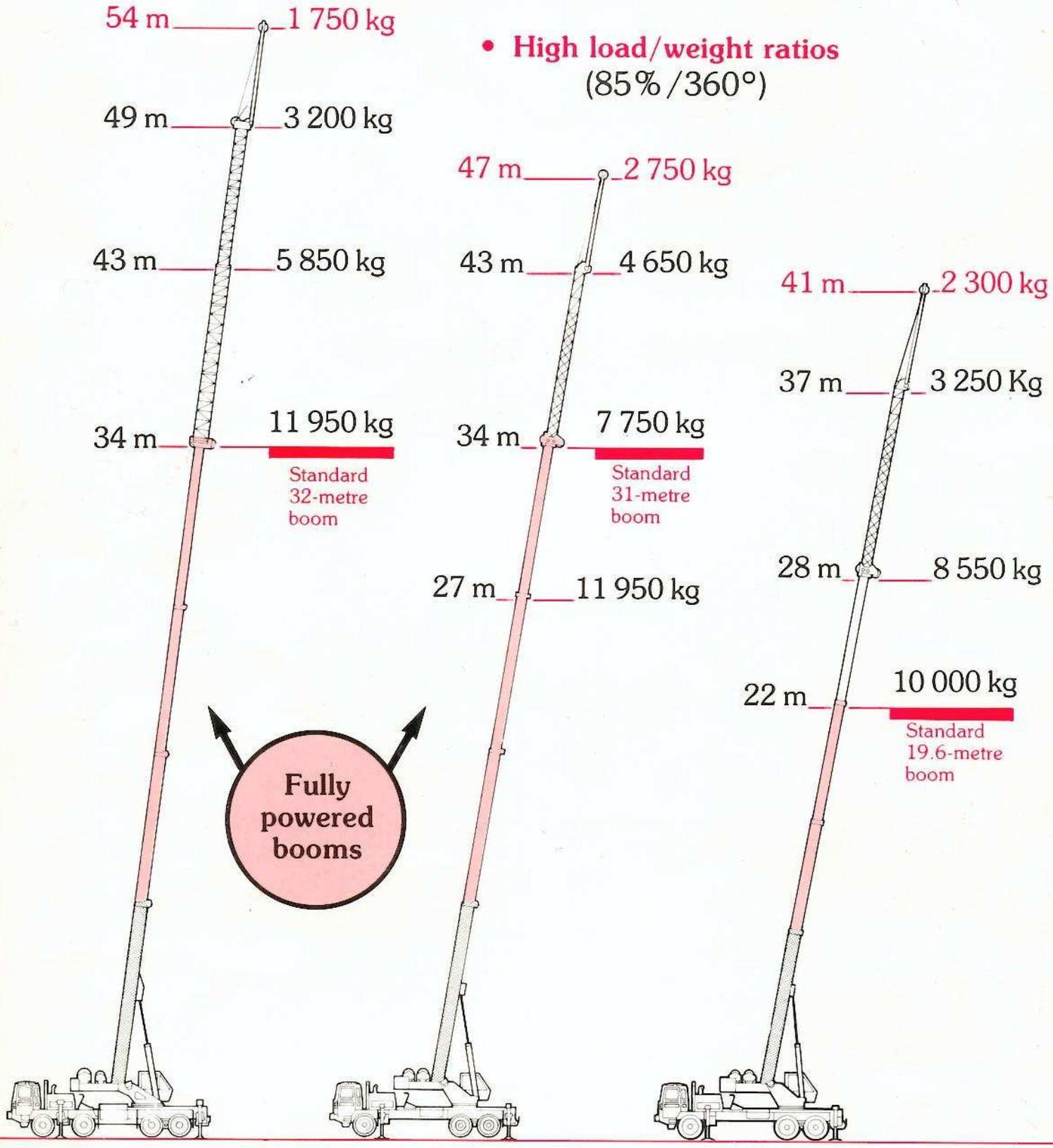

C 580

MAXIMUM CAPACITY AT 3 METRES		
Metric tons		US tons
75 %	85 %	85 %
45 T	50 T	55 T

C 380

MAXIMUM CAPACITY AT 3 METRES		
Metric tons		US tons
75 %	85 %	85 %
30 T	32 T	35 T

C 330

MAXIMUM CAPACITY AT 3 METRES		
Metric tons		US tons
75 %	85 %	85 %
30 T	32 T	35 T

dzwigi24.pl

a standard PPM feature

The high performances offered by PPM booms are the result of an improved balance between the 3 key factors of any telescopic boom : the design of boom sections, plus the guiding and telescoping systems. PPM's design never favours one of these 3 elements to the detriment of the other two. This assembly must be examined as a whole in order to judge and make comparisons. You will then understand more by PPM remains the pionner of telescoping under load, with first-class lifting capabilities.

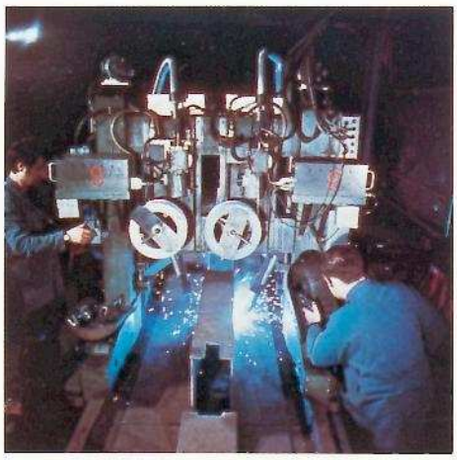

BOOM SECTION :
simple design - quality manufacture - rigidity

The straight forward design of the 4 plate rectangular section enables greater manufacturing precision, and its double symmetry offers a more rational materials balance. Frame rigidity and stability are increased by the use of very high tensile steel and concentrated welding at the four section angles. Automatic continuous welding guarantees penetration and quality of welds.

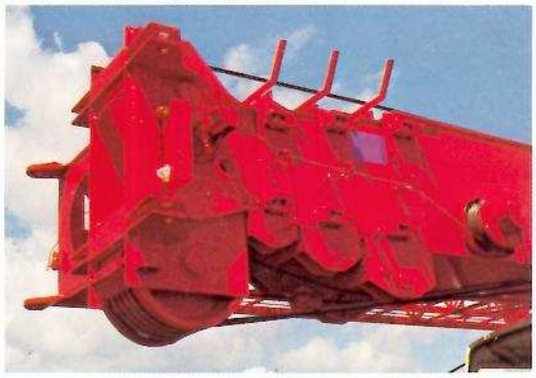

ROLLER GUIDES :

Precision
and
High efficiency (+ 30%)

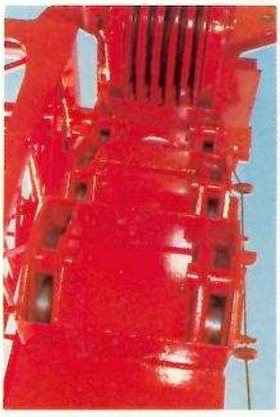

The guiding of boom sections on bearing mounted rollers is a complete revolution. For several years, this technique has been applied to all telescopic cranes in the PPM range. Compared to the traditional solution of friction pads the more functional roller guides considerably reduce the loss of energy due to friction (in a ratio of 1 to 6) ; this obviously increases telescoping capacity (by up to 30 %). For horizontal guide, the roller trains ensure, through automatic trim, good load distribution over the bearings and avoid the danger of sticking : the retraction of sections under load is carried out smoothly and without jerks. As a result PPM is able to telescope loads, not just during extension but also during retraction, however small boom angle may be. For the operator, it offers an extra fully efficient motion in addition to hoisting, derricking and slewing.

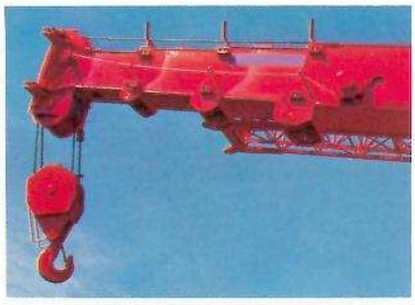

TELESCOPING :

Just one
single controlled cylinder

automatic synchronized
boom sections

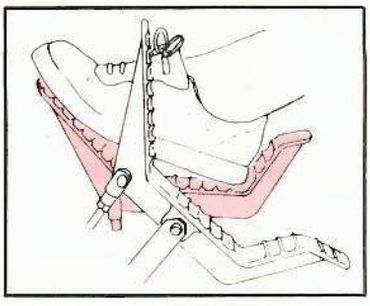

The telescoping system consists in a single double acting cylinder. A single-rod cylinder for the C 330 and C 380 and a 3-rod cylinder for the C 580. The single cylinder design reduces dead load and offers increased efficiency by being centred in the boom axis. To reduce natural deflection to a minimum, the rod is inserted in the boom base and, for the C 580, guide-stays support the rods at different points.

Automatic synchronizing of boom sections offers improved safety and increased operating speed. No need for the operator to permanently check boom-section proportioning. Simple pressure on a pedal immediately provides the required boom length, with perfectly synchronized sections. Being entirely mechanical it is a positive and reliable system : the synchronizing chains require no adjustment for length and are over designed for maximum load telescoping.

With the C 380 and C 580, PPM offers, **"fully powered boom"** over the whole main boom length.

dzwigi24.pl

Easy 3-motion

A circuit with independent flow rates and separate distribution for each main function : winch - slewing - boom.

C 330 - C 380 circuit

• 2 speed ranges

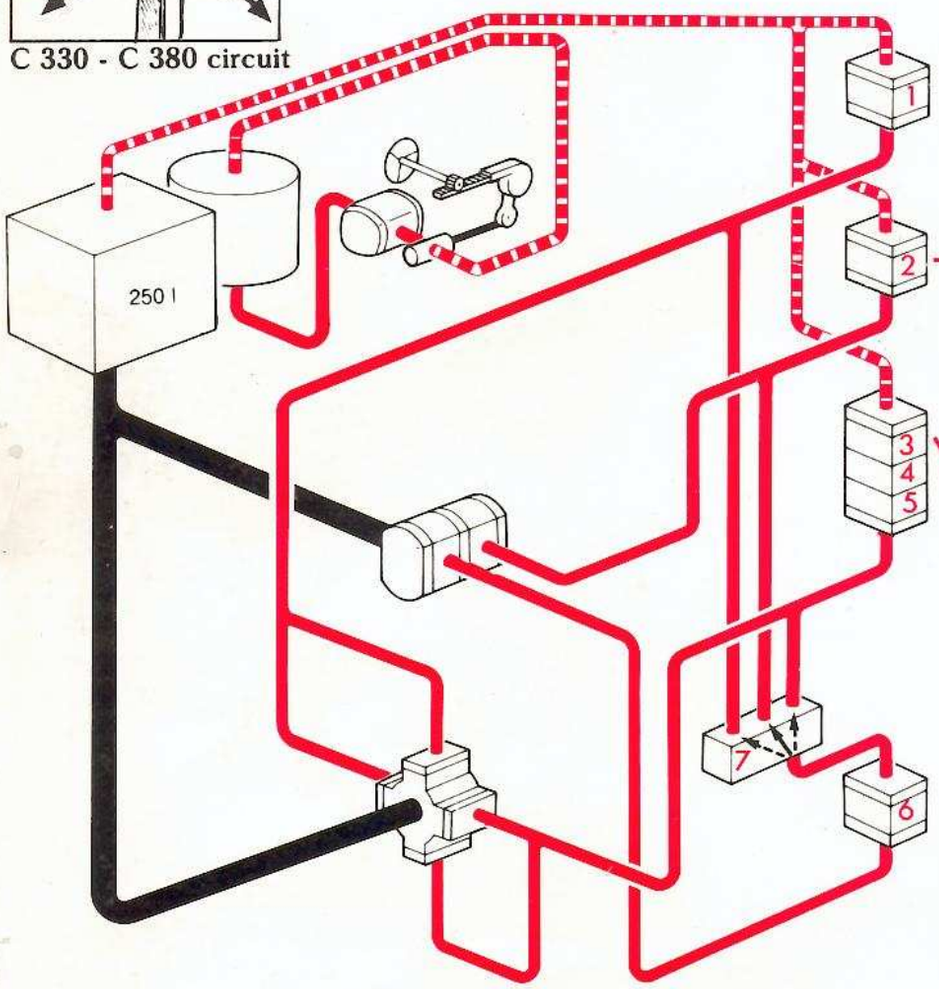

1 - Main winch – 2 - Slewing motor – 3 - 4 - Boom : lifting, telescoping – 5 - Auxiliary winch – 6 - Outriggers – 7 - Flow selector.

Precision or productivity : an intelligent circuit

There is no mystery about the efficiency of hydraulic circuits on PPM road cranes.

First of all, it is the result of the choice and layout of the main components. From the pump to the valve bank everything has been thought out to reduce to a minimum any interference between the main functions, by using the principle of separate flows and distribution.

It means also optimum exploitation of the installed hydraulic power, through the balance of flow delivery and working pressures. Here again, nothing is simpler when it is known how to use High Pressure.

- In addition, the PPM circuit, thanks to the contribution of an extra flow (selector 7), offers two speed ranges for both winch and boom operations : complete flexibility from micro speed to maximum speed.
- For high productivity in duty cycle work with combination of motions-like pouring concrete-or precision work like framework erection or prefabricated sections, PPM always provides an efficient solution.

combination

dzwigi24.pl

A rational layout of lever and pedal controls enables simultaneous operation of the 3 main functions : winch - slewing - boom.

Everything at your fingertips

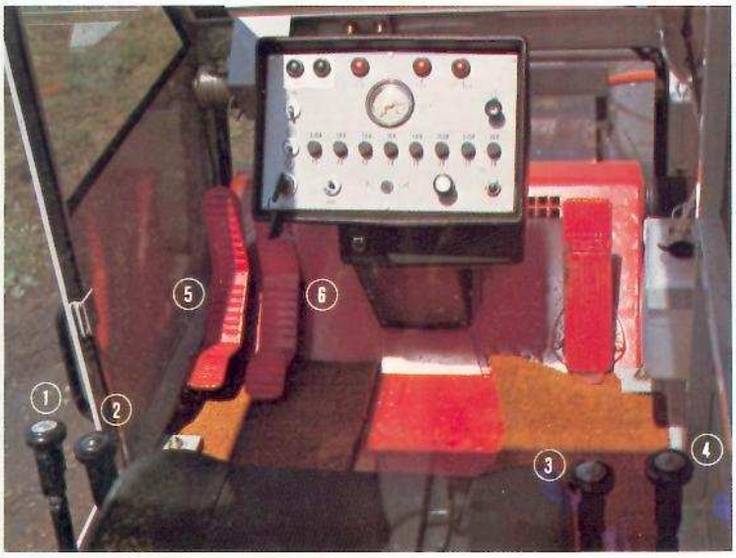

1 - 5 Boom lifting
2 - Slewing
3 - Main winch
4 - Auxiliary winch
6 - Telescoping

To get maximum benefit from all the advantages offered by the hydraulic circuit, the crane driver must be able to operate, separately or simultaneously, the 3 crane functions : winch - slewing - boom.

On PPM road cranes, all controls are rationally laid out and within easy reach of hand or foot, without any need for complicated crossing movements of hands or feet.

- Short levers, 2 on each side of the seat.
- Dual lifting controls : hand lever or foot pedal.
- Speed-change buttons, lever incorporated.
- Main and auxiliary winches separate controls.

Direct linkage by rigid connecting-rods to the crane-function valve banks also increases the sensitiveness and precision of the controls. The crane driver will always have improved fingertip control of load behaviour.

A pleasure to drive and operate

A pleasure to drive from road cab, a pleasure to operate from crane cab :

- Pleasure of seeing everything - in front, behind, above, below, to the right and to the left, a full view of the boom, the whole boom, the winches, the cable winding... PPM crane cabs offer all-round vision with 3 square metres of window area.
- Pleasure of being comfortably wedged in the seat and of easily finding the best driving position thanks to a 3-way adjustable seat.
- Pleasure of firm and precise controls : short levers, fingertip control of 2nd speed range, instruments and warning lights grouped together on a single front control panel.
- Pleasure of operating in a fully-equipped cab : working light, 2 windscreen wipers, cigar lighter, ash-tray, fold-away windscreen, independant heater carpeted flooring, removable access ladder...

  and, as an optional extra, all types of climatic adaptations to improve the comfort, safety and productivity of the machine in any latitude.

Servicing : the key points

• Common parts : "C" standard

The PPM road-crane range is designed to make servicing both easier, more systematic and more economical.

Uniformity, interchangeability and modular design, are the basis of a system designed to use maximum common parts and to simplify service and maintenance.

Parts store operations and recommended stock levels are therefore reduced, making stocking easier and less costly for agents and users with a large fleet of PPM road cranes.

dzwigi24.pl

Some common parts

DESCRIPTION	REFERENCE	C 330	C 380	C 580
ENGINE	**DEUTZ**	**BF 6 L 413 FR**		**BF6L413FRC**
Air filter cartridge	W 0350586	•	•	•
Clogging indicator	K 1841642	•	•	•
Gas-oil filter cartridge	B 1050595	•	•	•
Oil filter cartridge	K 0150521	•	•	•
Fuel tank	F 0340290	•	•	•
TRANSMISSION				
Clutch	Q 1943123	•	•	•
Gearbox	ZF S.6.90	•	•	•
Overdrive	ZF GV.90	•	•	•
Transfer box	N 3038933	•	•	
	J 3038906			•
MAN Axles { Rear tandem	W 1848576	•	•	•
MAN Axles { Front axle	X 1848577	•	•	•
Tyres	12.00 x 20	•	•	•
HYDRAULICS				
Poclain pump	T 0934546	•	•	•
Steering pump	G 2543507	•	•	•
Outrigger cylinder	L 4946712	•	•	•
Beam-extension cylinder	X 3546782	•	•	•
Slewing motor	J 0143712	•	•	•
Slewing reduction gear	L 2438930	•	•	•

DESCRIPTION	REFERENCE	C 330	C 380	C 580
Slewing brake	B 0443142	•	•	•
Outrigger valve bank	M 1843687	•	•	•
Winch motor 54.8 cu.cms	W 0943779	•	•	•
Hoist valve bank	R 1743645	•	•	•
Winch reduction gear 25.5/1	T 2438914	•	•	•
Winch brake	L 0443174	•	•	•
Outrigger check valve	Q 1543337	•	•	•
Control block	U 2543312	•	•	•
Speed limiter	N 2343390	•	•	•
PNEUMATICS				
Air compressor	J 2543532	•	•	•
Air regulator	P 0743396	•	•	•
Brake cylinder	X 2443380	•	•	•
Water separator	B 0350567	•	•	•
Pneumatic cylinder	W 0346768	•	•	•
ELECTRICITY				
Starter motor	X 0241521	•	•	•
Alternator	Z 0241522	•	•	•
Alternator drive-belt	M 138747			
Electro-valve	N 1543381	•	•	•
CAB { Carrier	E 5443851	•	•	•
CAB { Crane	E 4343899			

• Technical assistance : presence and efficiency

Under any latitude, PPM road cranes are backed up by a service network and PPM experts. Throughout the world, PPM technical delegates provide a full assistance to 400 service points ready to operate with competence and with all necessary means.

Prevention, intervention, information are permanent actions of PPM technical delegates.

• Technical training : learning "on the spot"

To ensure efficient use and service on PPM road cranes, PPM Technical Training Center organize specific training sessions for crane operators technicians and mechanics.

Either on site or in factory, for driving or maintenance, PPM instructors are site specialists and pride themselves on their experience and « know-how ».

This training is completed by a technical documentation for each type of machine and a certificate is issued confirming competence in either servicing or operating.

Carrier servicing

ELECTRICAL CIRCUIT

Modular concept. Connection boxes and panels are pre-wired sub-assemblies, pretested on bench and connected by quick disconnect plugs. Wiring harnesses are specifics per function. Each wire is numbered. All upperstructure fuses are grouped on front panel, and carrier fuses under steering wheel.

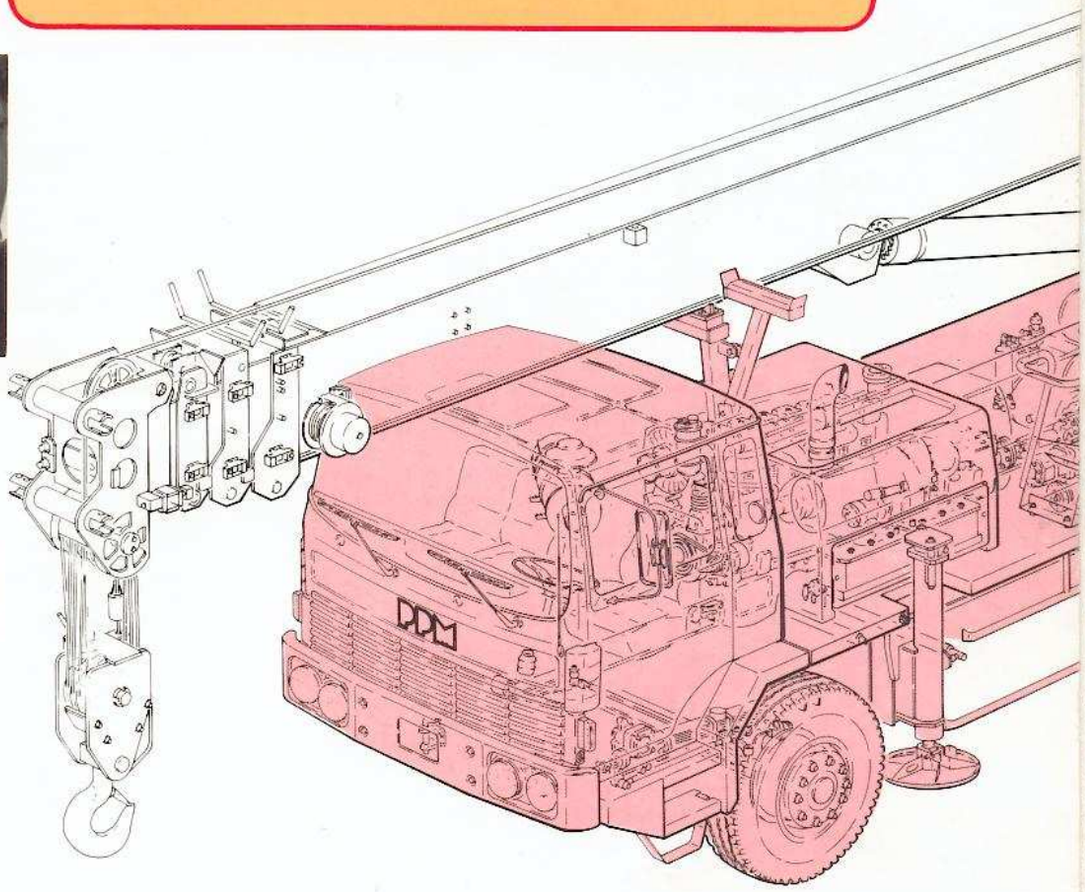

dzwigi24.pl

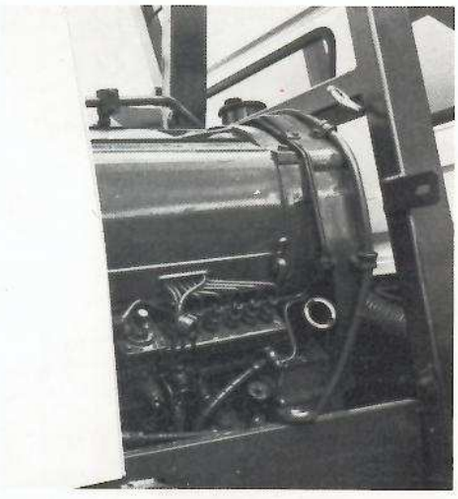

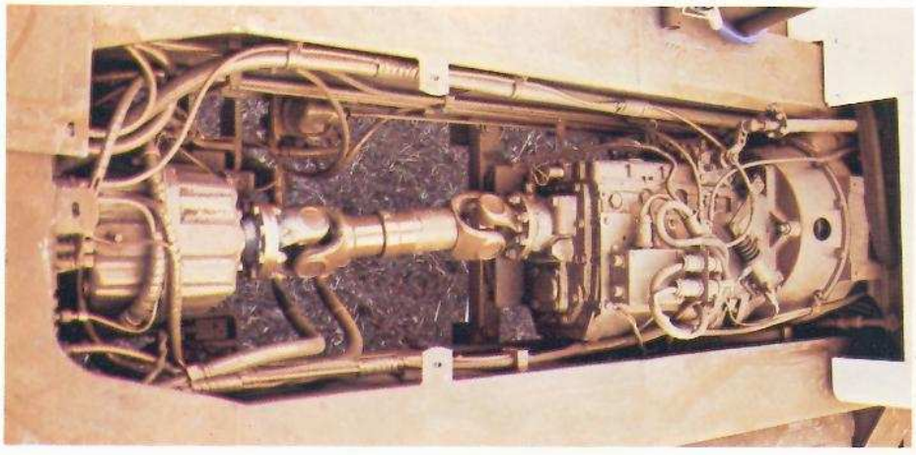

ENGINE AND TRANSMISSION

It is enough to slide a hood or to move a trap to reach engine or transmission to check or complete levels, clean or change filters. All is visible, easily located, quickly done - Deck-plate is used as a continuous platform and allows an easy circulation all around to facilitate accessibility to main carrier and upperstructure components.

"All within hand reach"

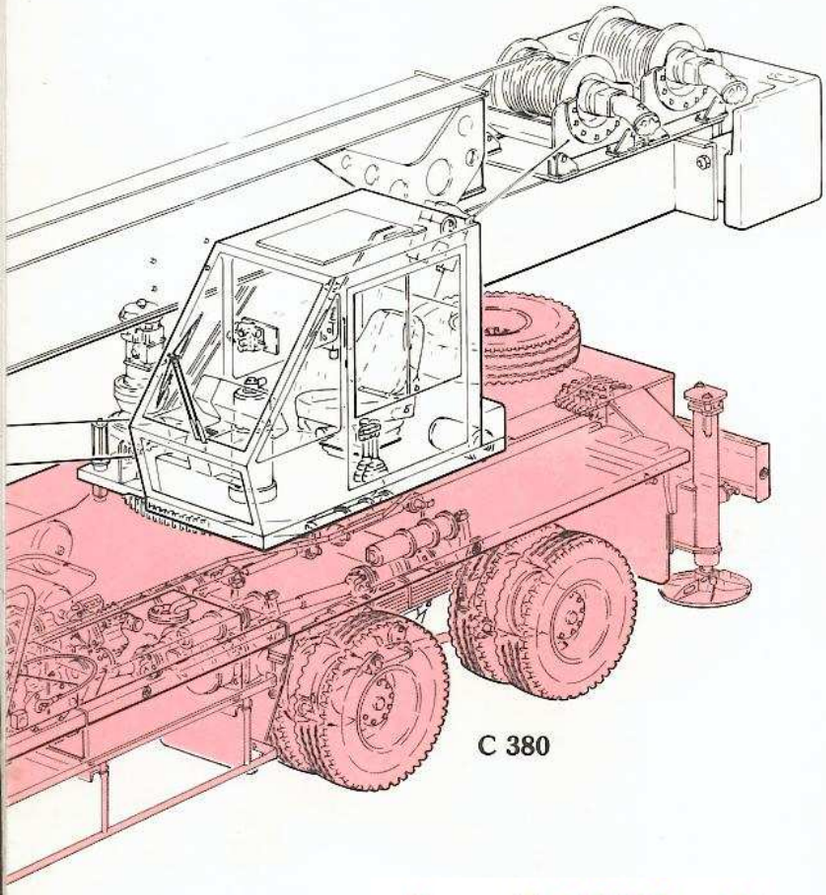

SPARE WHEEL

A special hanling arm, mounted on superstructure, helps to lift and move spare wheel easily and effortless.

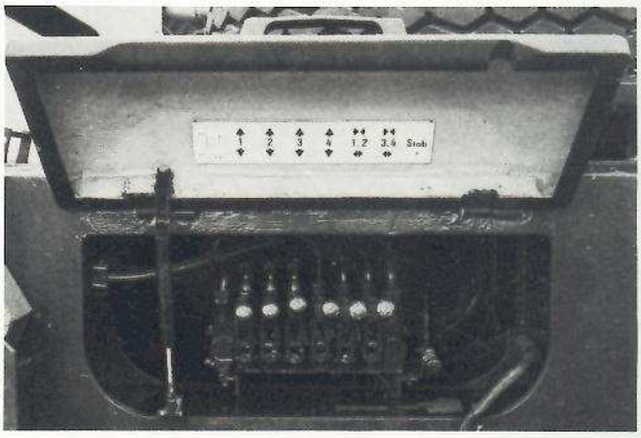

dzwigi24.pl

OUTRIGGERS

The hydraulic valve bank is of direct drive type by means of control levers without electrical or pneumatic control system.

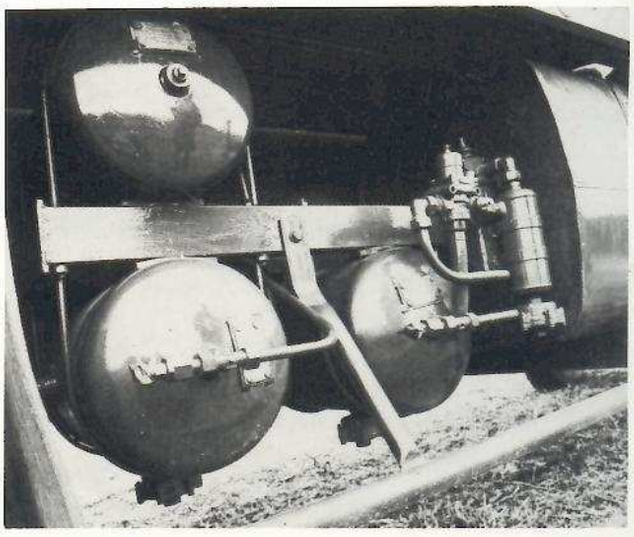

PNEUMATIC UNIT

It includes an air regulator with tyres inflating outlet ; necessary pipe and pressure gauge are part of the standard equipment - Water separator, antifreeze device and automatic bleeders are standard.

Upperstruct

dzwigi24.pl

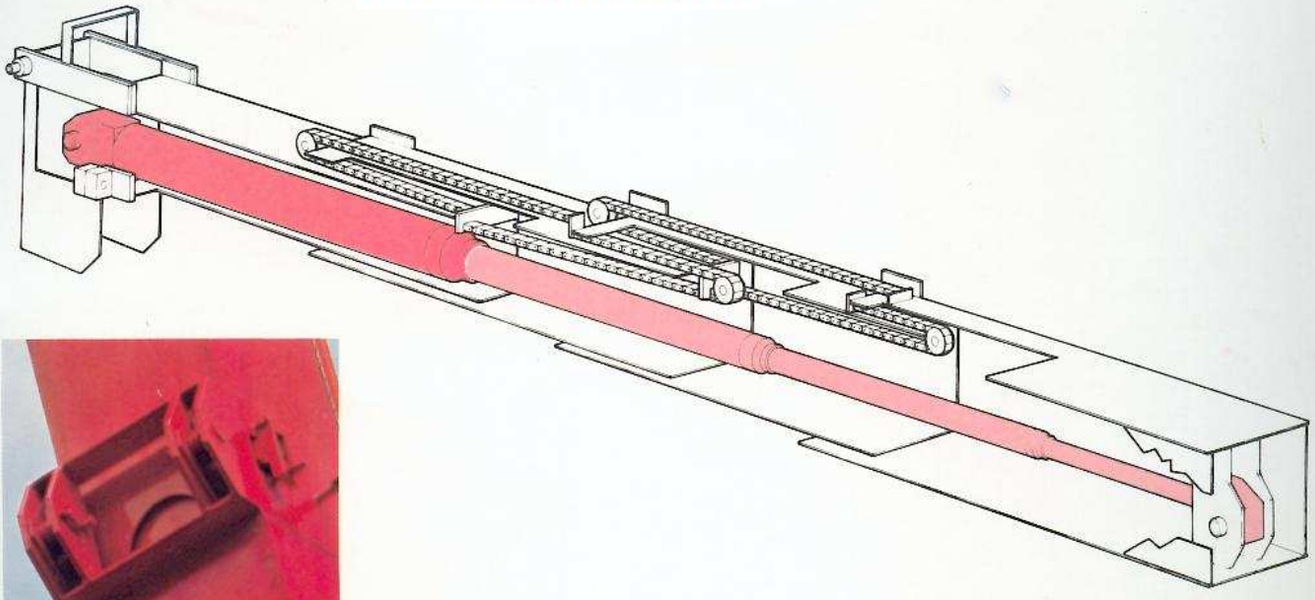

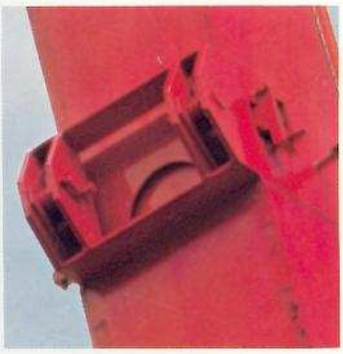

BOOM

Single telescoping ram - No internal flex hoses ; no hose reel. Sections are guided by life greased bearings : no periodical greasing of boom sections. Ram connection on 2 points only : easy extraction of the ram through one end or the other (of the boom).

Synchronization of sections by means of chains : elongation and wear almost null. Negative derricking angle : easy boom head accessibility for reeving, fitting of extensions, maintenance, etc.

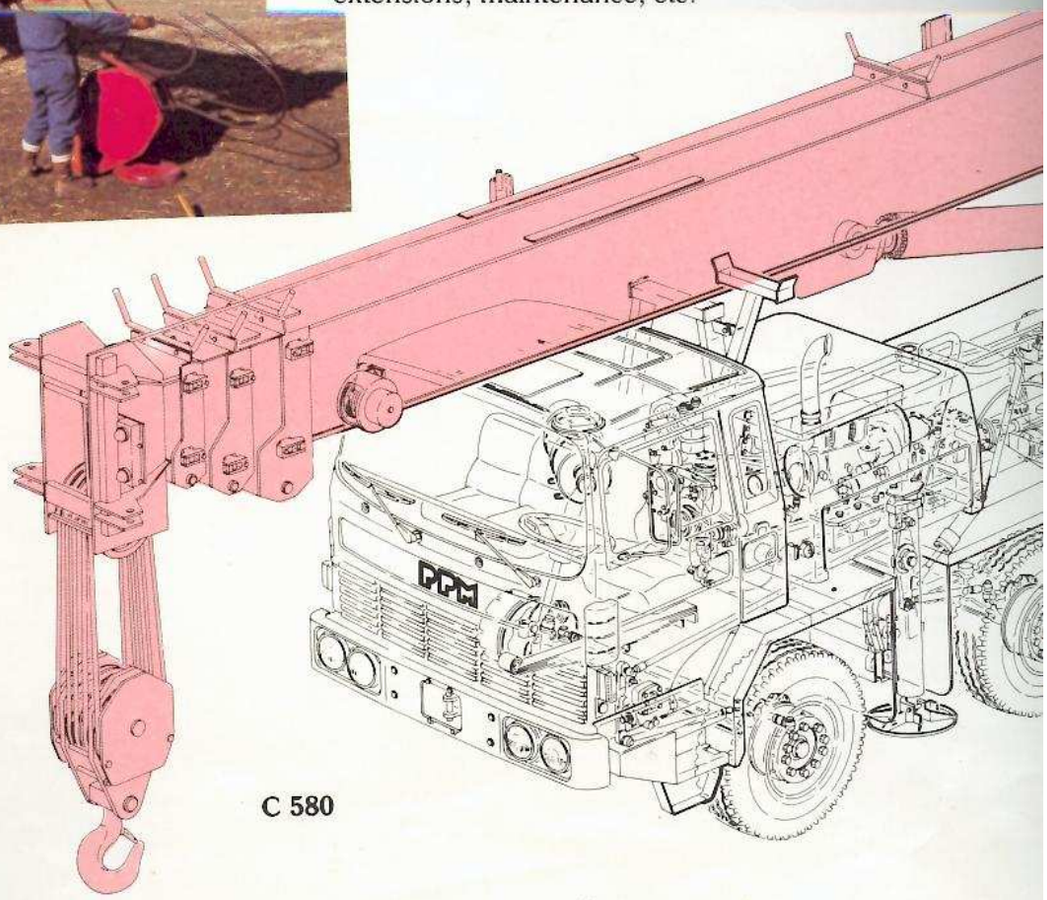

C 580

ure servicing

dzwigi24.pl

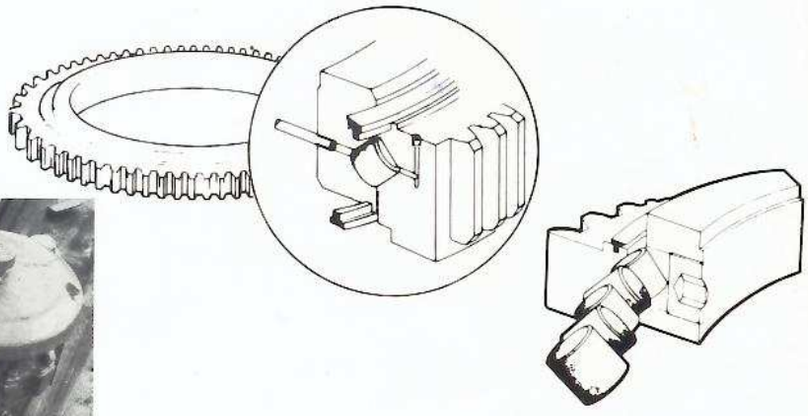

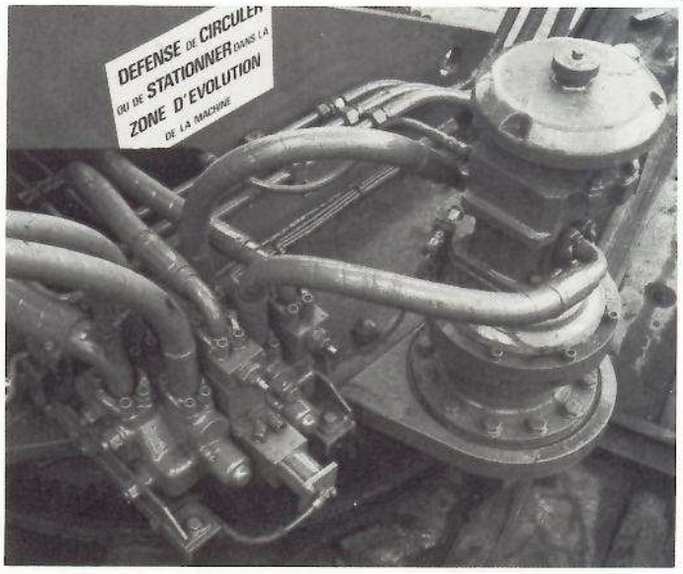

SLEWING

The reduction gear motor is located on the outside of the central turret structure : direct accessibility enable direct visual inspection and straight forward periodic lubrication. The adjustment of play between teeth is made easier by the offset mounting of the reduction gear motor unit.

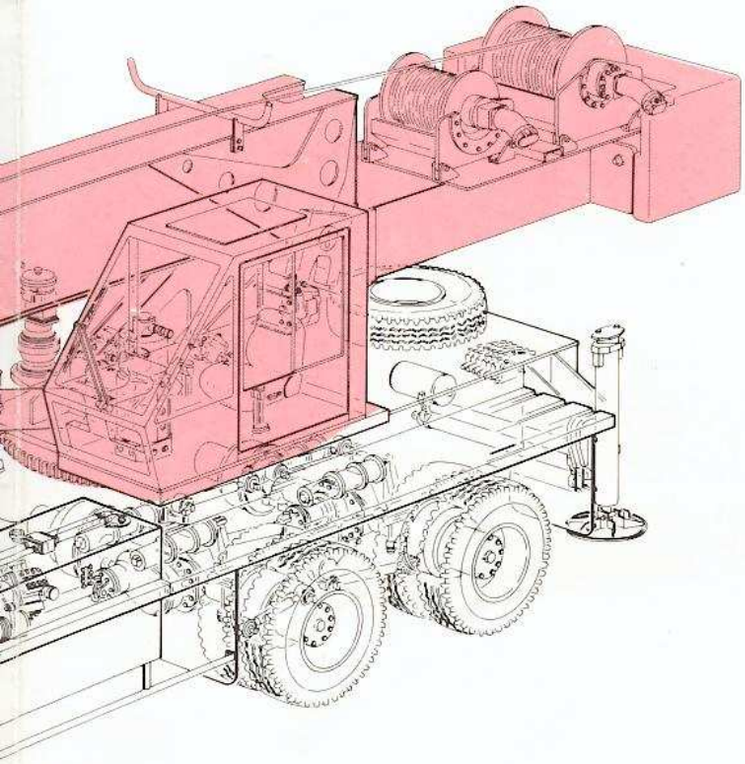

WINCHES

Not housed in the structure : perfectly visible and accessible. Connected by 4 pins, they are easily removable and serviced - Hydraulic control block flanged to the motor : simplified diagnosis - Standard grooved drum and cable press device for controlling cable winding and longevity.

HYDRAULICS

Pumps flanged to the transfer box : accessibility - Valve banks located as close as possible to the receivers : less piping - easier diagnosis. Pressure-gauge sockets on valve banks and receivers : simplified pressure control - Direct control of functions through rigid connecting-rods : reliabiliy - Centralized tank filtration.

dzwigi24.pl

Economy : some examples

• PPM road cranes : low-cost travelling

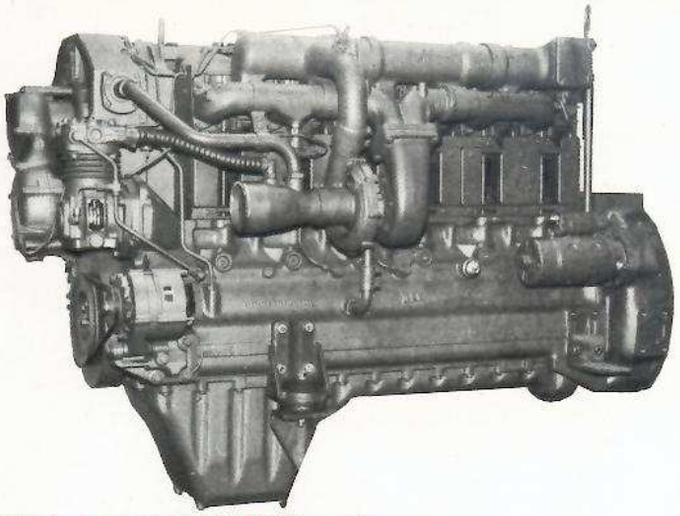

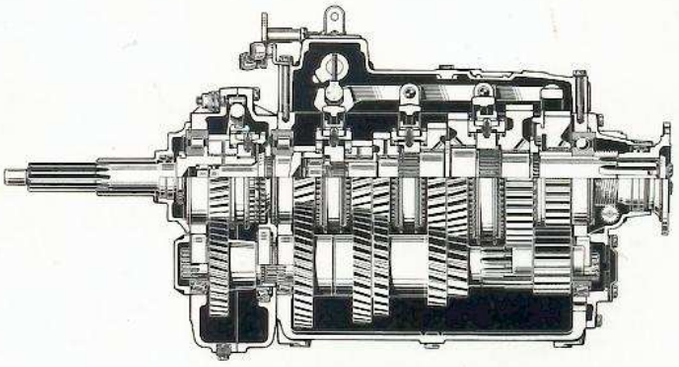

Turbocharged DEUTZ engines :
Modern technology - low consumption.

The up-to date technology of the BF 6L 413 FR and FRC series leads, for equal output,to fuel savings in the order of 15 to 20 % according to use. This is the overall result of direct injection + turbocharging + four-stroke cycle + air-cooling.

The turbocharger offers, for equal installed capacity, a higher maximum torque at a lower engine speed : hence lower consumption and high altitudes performances compared with a naturally aspirated engine.

ZF Synchronized gear-box
12 speeds : flexibility - economy

The ZF gear-box with overdrive is an essential complement to the turbocharged engine for optimum use of the available power.

Due to the 12 well-spaced gears, driving and gearchanging conforms easily and instantaneously to road profile and trafic conditions.

Variations in engine speed are more progressive, the engine is not overstrained, the consumption is lower, driving is more flexible, more comfortable, more economical.

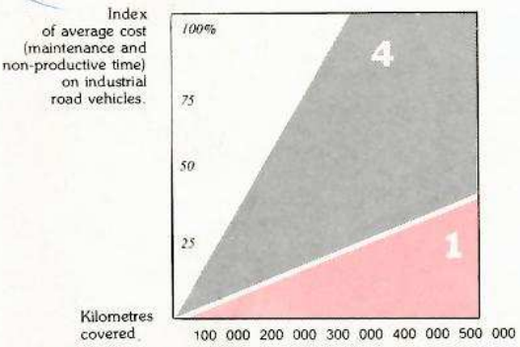

Optional TELMA electric retarder :
Brakes maintenance reduced by 75 %

Investment in an electric retarder is not only a guarantee of security but also profitability. Less overheating and wear of brakes means reduction in servicing of 3 to 4 times.

Add to this savings made on tyres which are not overheated, less wear, as well as time saved on difficult routes ; the cost of the electric retarder will be quickly paid back.

• PPM road cranes : high-performance hydraulics

The hydraulic circuits of PPM road cranes make considerable use of POCLAIN high-pressure systems which, by optimizing the overall output of the installation, lead to more economical operation. For example :

- the POCLAIN piston pump offers both output (92 %) and the lowest rate of wear : no energy wasted, longer life.
- overall circuit loss of charge are reduced by 20 to 25 % compared to systems using low pressure only : improved output, less wasteful use of energy through friction and heat loss.
- reduced capacity of hydraulic oil circuits : up to 2 times less in some cases.

• PPM road cranes : simple and economic servicing

Chassis and transmission, turret and main hoisting elements, from the boom head to the spare wheel, everything is designed so that the operator or specialist mechanic can easily and rapidly operate or repair. Time is money. **Quicker servicing time means less off the road. Try it and see for yourself.**