DESEC TRACKLAYER 1200/2000

TURNOUT REPLACEMENT MACHINE

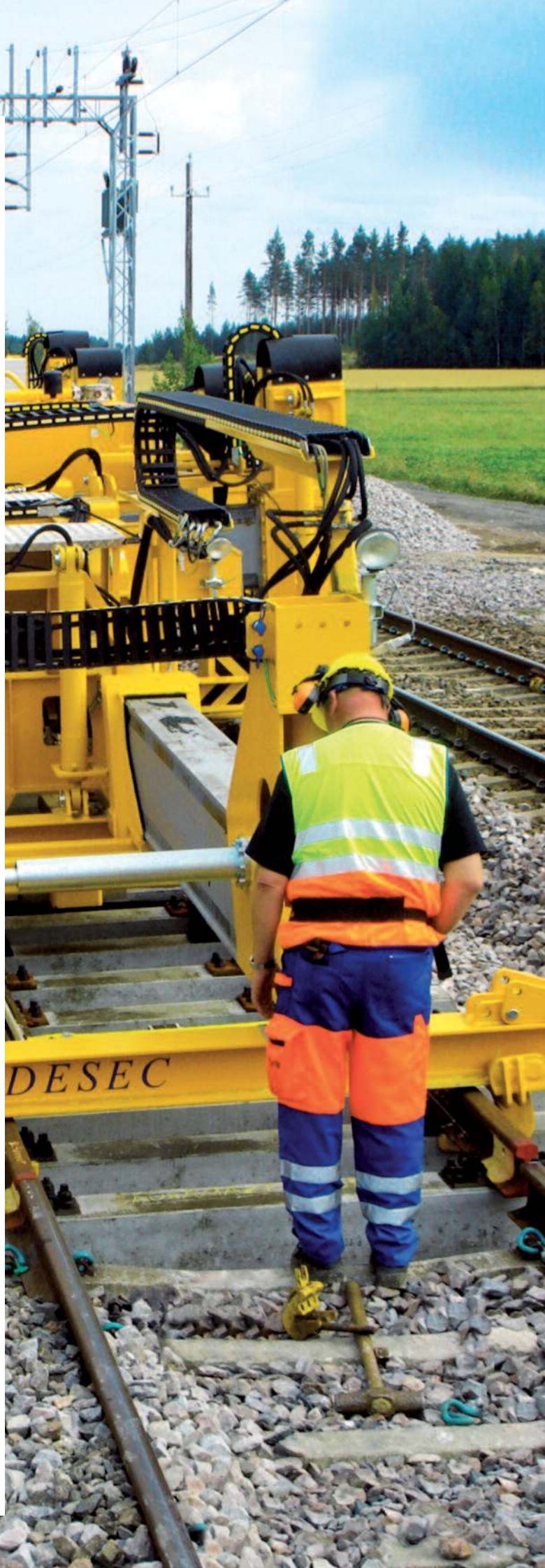

KIROW

↑
Only one track is required: the DESEC Tracklayer and Switch Tilter working together

THE DESEC TRACKLAYER: SOLO OPERATOR TURNOUT REPLACEMENT, ROBUST AND HIGHLY MANOEUVERABLE ON TOUGH TERRAIN.

QUALITY, SAFETY AND MANOEUVRABILITY IN EVERYDAY RAILWAY ROUTINES

Railway networks are gaining in importance all over the world. They are a catalyst for the development of both country and region. Large rail infrastructure investments are being undertaken by governments and private companies alike to increase rail capacity. Increasing efforts are also being made to maintain existing rail networks.

The installation and maintenance of switches and turnouts is always a special task within the track construction phase. Turnouts are an essential part of the track and their installation needs customized processes and equipment. Depending on the rail environment and available logistics different methods have been developed in order to handle this task.

In the dense passenger transport rail infrastructure of todays highly populated cities rail bound methods of turnout replacement are the preferred choice. However, in the tough environment away from urban areas often single lines demand the turnout replacement machine must leave the track after work is completed in order to let trains pass. On a double line, in rural and remote locations the turnout replacement machine should be able to work on one line only, keeping the second line open for traffic. The machine should also be able to pick up turnout parts from an assembly site positioned at trackside.

The operational precision of the switch after its installation is essential for the entire service life and related maintenance costs. Therefore, the demand on the careful treatment of track and turnout parts, especially during their installation is essential.

→ **INFO**

The DESEC Tracklayer has been designed and developed specifically to give the operator:

- high working productivity
- high operational safety
- easy access to site

→ Operational Highlights:

- excellent manoeuvrability in all environments via crawlers
- no interference with adjacent train movements
- precision in all movements
- careful handling of track and turnout parts
- safe and simple operation of the machine
- fast and secure transportation on rail or road
- high reliability

↑
Turnout laying demands safe, accurate and efficient working methods

CLEAR ADVANTAGES OF THE DESEC TRACKLAYER: PERFECT MANOEUVRABILITY.

The DESEC Tracklayer is capable of moving and carrying panels in any desired direction over unlimited distances with agility and precision. The functionality of the machine is very flexible, whether manoeuvring around site obstacles, shifting, tilting and/or moving the track panels in any direction. In restricted working locations, the size and shape of the machine can be quickly adjusted with the use of its telescopic arms, operated individually or simultaneously, and set to any desired length. No temporary or lead-in tracks are required for the turnout installation.

The DESEC Tracklayer can turn the crawlers up to 90° and can drive in any direction; in track line, 90° to the side or 45°. The ability to drive sideways is very important in order to leave the track line and for changing from one line to another, especially when taking out the old track when it may become necessary to store or dispose of the panels beside the track. In addition following trackside assembly of a new switch the DESEC Tracklayer will drive sideways carrying the switch and position it on the track.

STEERING BY GANTRY

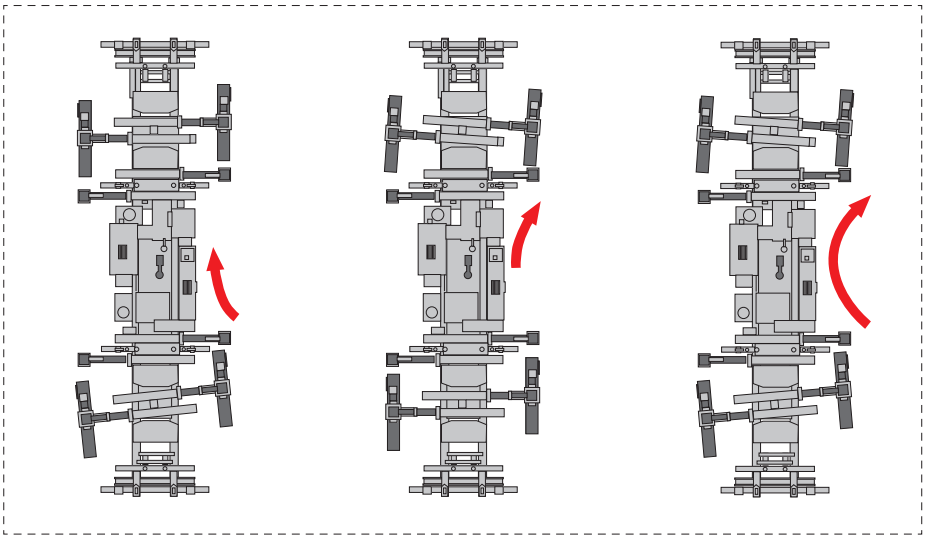

STEERING BY CRAWLERS

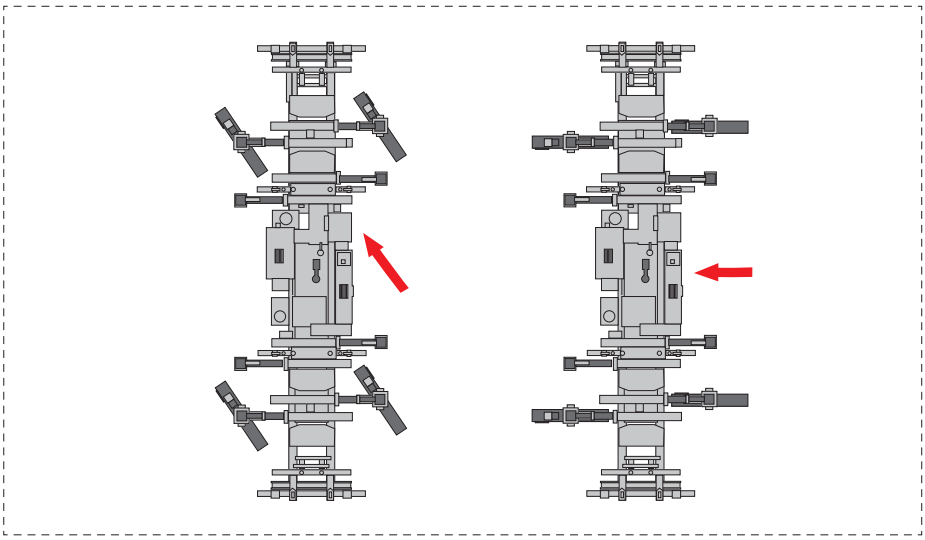

Remote-controlled crawler turning

Driving sideways

SIDESTEPPING WITH LOAD

The DESEC Tracklayer can lift itself and the load with crawler legs as well as with support legs. Thus, it can move laterally step by step (side-stepping) with suspended load. The ability to side-step with lifted load is a significantly beneficial feature when moving the load to the adjacent line or from the mounting position to the track. Lowering the load to the ground during side-stepping operation is a time consuming process requiring the work place to be cleared of obstacles such as signalling equipment etc. In addition steep embankments or uneven ground are not suitable for laying a switch panel down. The DESEC Tracklayer easily handles these problem areas by using the side-stepping function with load – obstacles can be avoided thus saving both time and costs.

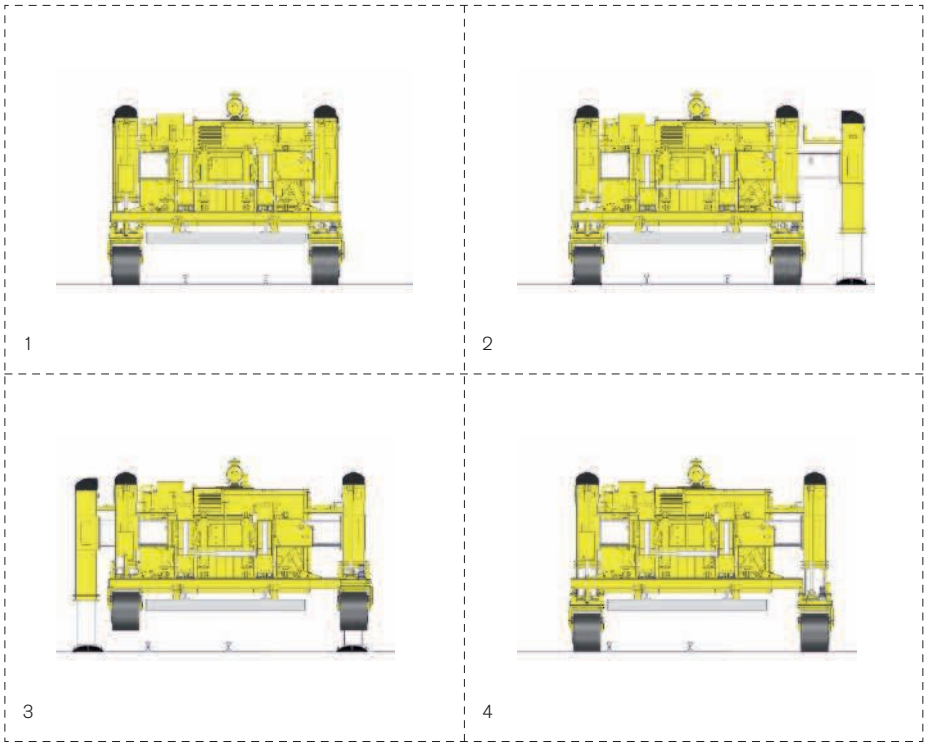

Sidestepping sequence

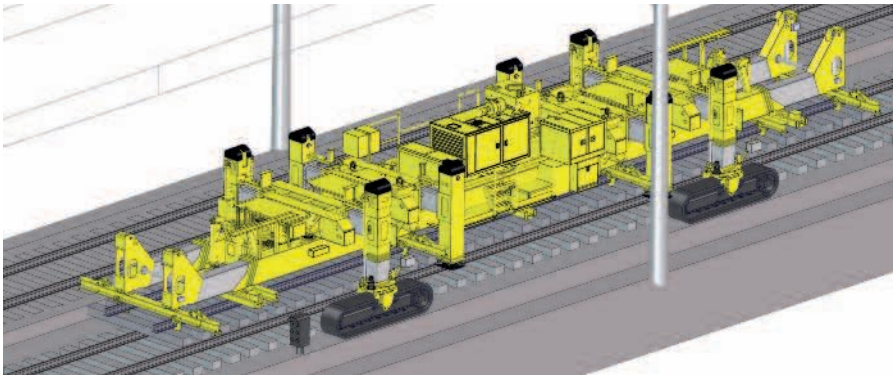

Poles, signals etc. obstruct travel path

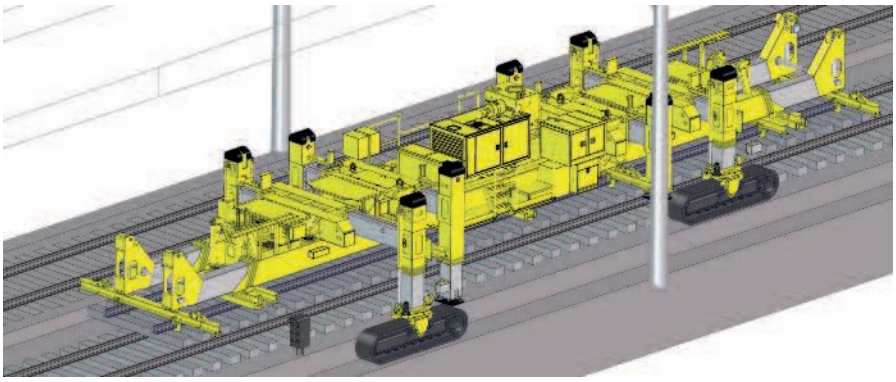

Change of crawler travelling position

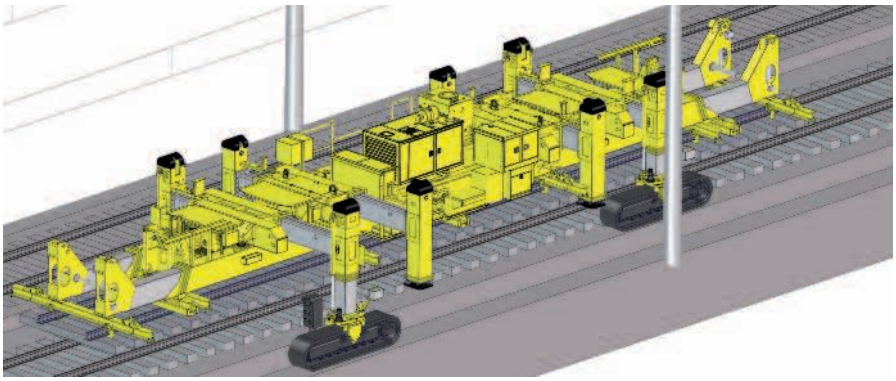

Passing the obstacle without lowering the load

Travelling on uneven ground beside the tracks

EXCELLENT MOBILITY UNDER ANY CONDITION

Uneven ground, crossing the tracks, off-road: the DESEC Tracklayer's working range is unlimited thanks to free movement on crawlers. Support legs allow crawler steering and sidestepping with load at any time.

Only one operator is needed to operate the DESEC Tracklayer by radio remote control. The operator can remain in a safe location with optimal views of the on-site working area. The machine's smooth working motion ensures that the turnout is positioned in one application into its correct final location with precision.

Just one operator controls the DESEC Tracklayer by radio remote control

Tracklayer with loaded turnout panel on trolleys during travel to the installation site

TRACKLAYER WITH TROLLEYS

Additional mobility within the railway infrastructure is gained when the Tracklayer is utilizing its trolleys. Fast rail-bound travel of the Tracklayer at speeds of up to 5 km/h with or without load is possible. Each trolley is designed for loading capacities of up to 50 t. This allows for the transport of the Tracklayer including a maximum permissible payload.

Due to their low weight and small dimensions, the trolleys can quickly be placed on or off the rail track depending on the work schedule at the construction site. The trolleys fulfil all regulations and standards applicable for this type of machine.

Both trolleys are equipped with their own powerpack. A direct radio link between the two vehicles ensures maximum safety when driving in tandem operation. The trolleys are operated via radio remote control.

Transportation of the Tracklayer by trolleys is fairly easy – after positioning of the trolleys, the Tracklayer lowers itself until it lays safely on top of the trolleys.

As soon as the crawlers have been retracted, transport travel can begin.

The use of the trolleys for the Tracklayer is particularly suitable for covering longer distances between the turnout assembly site and the installation site. Rail-bound travel of the Tracklayer on trolleys proves itself very useful for rail tracks with lots of signalling (infrastructure) and steep embankments. The quick transport of the Tracklayer at the construction site saves precious time during the possession period – an absolute benefit for the operator.

The combination of the Tracklayer's all-terrain crawler tracks and rail-bound trolleys guarantees maximum flexibility and mobility when working with the Tracklayer – regardless of the conditions.

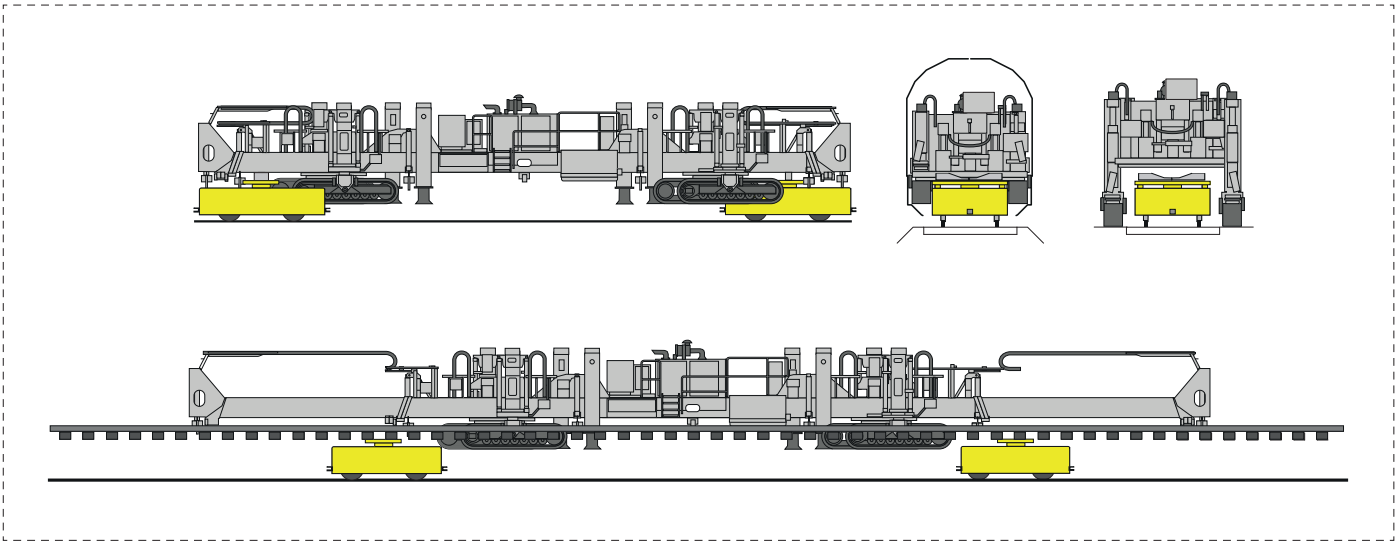

Tracklayer on trolleys

CLEAR ADVANTAGES OF THE DESEC TRACKLAYER: FIRST-CLASS QUALITY HANDLING OF TRACK SECTIONS.

The panel is firmly suspended under the body of the DESEC Tracklayer. The crawler gantries can move at their joints and as such the crawler movements, even in rough terrain, do not bend the body of the DESEC Tracklayer – the switch panel is kept straight without swing, twist or bow. The DESEC Tracklayer ensures the geometry of turnout remains unchanged.

Load is grabbed by lifting hooks underneath the rail foot

The switch panel is grabbed by lifting hooks which are easily shifted underneath the rail foot.

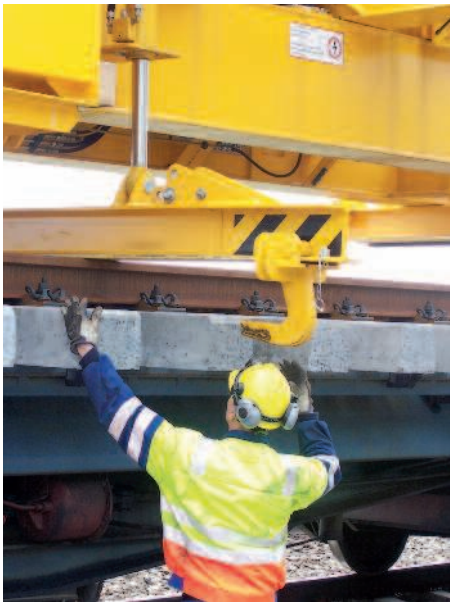

Lifting hooks can be operated from the ground

Even difficult panels can be lifted and transported smoothly without problem.

Difficult panel layouts can be handled

Switch panel is carried without bending or twisting

Sidestepping, steering and change of direction without lowering the load

The operator places the switch panel accurately standing right at the track joint

The operator can always stand at the right point

Rubber coated crawler pads for driving in the railway environment

The operator moves everything by remote control standing right at the track joint. Thus, he has the best view of the machine and the surrounding area. The operator can act and react according to the current conditions.

Crawler tracks are surfaced with rubber pads for driving in the railway environment. The low ground pressure exerted by the DESEC Tracklayer makes it possible to travel safely even under difficult conditions.

CLEAR ADVANTAGES OF THE DESEC TRACKLAYER: SAFETY.

The DESEC Tracklayer allows traffic to continue on the adjacent track during the turnout laying process. The machine can be safely controlled without infringing the neighbouring track.

STABLE AND SAFE IN ANY SITUATION

The stable construction of the DESEC Tracklayer with its centre of gravity between the crawlers, guarantees that the machine will never tip.

The new control system monitors all the machine systems and the positions of working components. With that the machine movements and lifting activities are always kept within the permissible range.

↑
The DESEC Tracklayer can work under catenary, traffic can continue on adjacent track

THE TECHNICAL HIGHLIGHTS.

Operator remains in a safe position with the best possible view to the working area

PERFECT OVERVIEW

The remote control offers a perfect view to the machine and its environment as the operator can individually choose its position. The operator can always locate himself in a safe and clear position.

All functions can be operated by remote control

BACKUP SYSTEMS

To ensure operation under any circumstances, the DESEC Tracklayer is engineered with several backup systems: An auxiliary power unit ensures the operation of all functions in the event of main engine failure.

A generator is connected to the auxiliary engine to provide additional power supply for electric hand tools etc.

Back-up cable between radio transmitter and receiver can be installed if radio communication is not viable.

In emergency case all functions can be operated manually

Electrically controlled hydraulic valves are installed with manual levers to ensure manual operation of all functions.

MODERN ENGINEERING: THE DESEC TRACKLAYER SETS HIGH STANDARDS IN QUALITY, SAFETY AND MANOEUVRABILITY.

DESEC Tracklayer is working perfectly with any switch transport wagon

The DESEC Tracklayer has been developed together with specialists from the national railways track laying department. Significant design requirements were established from this process, making the DESEC Tracklayer a unique machine with outstanding versatility and quality. The DESEC Tracklayer is:

- small for transport on rail or road and big when it has unloaded itself
- able to work independently on one track leaving the adjacent line open
- able to travel on crawlers in any direction and has additional support arms for side stepping with suspended load
- the load is suspended under the machine main frame and the movement of the crawlers on rough terrain doesn't bend or twist the turnout panel
- driven by one operator with radio remote control

WORKING METHODS

Thanks to the combination of steered crawler movement and side walking with support legs the DESEC Tracklayer can move in any direction independent of the track. Therefore it can work picking up the turnout panels from the side, as well as in line with the track, unloading the turnout panels from wagons.

The adjacent line can be kept open for traffic. After assembling the turnout the DESEC Tracklayer can leave the track sideways in order to open the line for traffic.

Switch transport wagon in train position

Switch transport wagon tilted down for unloading by Tracklayer

Installation of panel by Tracklayer

Only one line has to be blocked for working

WORKING TOGETHER WITH SWITCH TRANSPORT WAGON

The most efficient turnout construction is achieved when the DESEC Tracklayer works together with a switch transport wagon. With this method the panels are delivered directly to the construction site and unloaded and installed with ease. The switch transport wagons can be located near the work site in order to minimize travelling distances.

The track sections are lifted off the wagons by the DESEC Tracklayer, the switch transport wagon is pulled from underneath and the load is lowered. The DESEC Tracklayer moves with load to the installation point, positions the panel with precision and moves back to the switch transport wagons to unload the next panel.

This operation requires only one track. The construction time is minimized.

Unloading and storage of all the switch components and then the assembly of the switch itself in between installations is completely eliminated. The switch is transported directly from the switch manufacturer to site guaranteeing factory tested quality turnout panels are installed and ready to work.

Switch transport wagon tilted down, Tracklayer unloads panel

Tracklayer drives with panel into the hole and install first panel

Tracklayer picks up second and subsequent panels and installs them in the hole

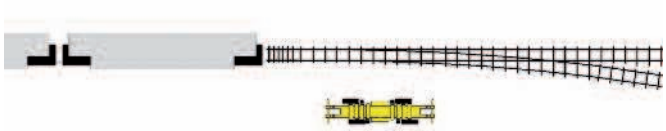

After installation Tracklayer can leave to the side

↑
Panel pick up from the trackside

WORKING FROM THE TRACKSIDE

The DESEC Tracklayer can pick up a panel from any assembly point off the track. It can travel off road wherever required and only needs one blocked track. One panel can be laid in less than 30 minutes – depending on the travel distance.

Given that the crawlers can rotate through 45° or 90° relative to the frame, the DESEC Tracklayer can move in any direction independent of the track. Furthermore it can avoid obstacles by side-stepping with the additional support arms.

During any movement or side-stepping the DESEC Tracklayer can retain its load as it is suspended by the main frame of the machine.

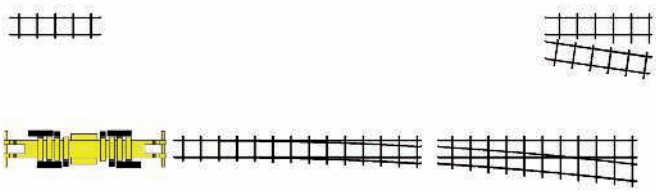

Tracklayer picks up panel from assembly place

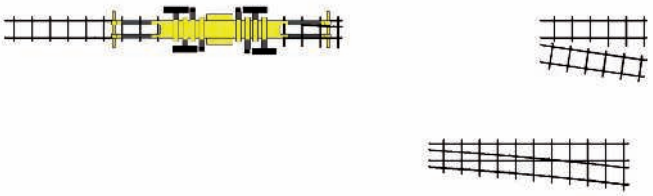

Panel is installed in the hole

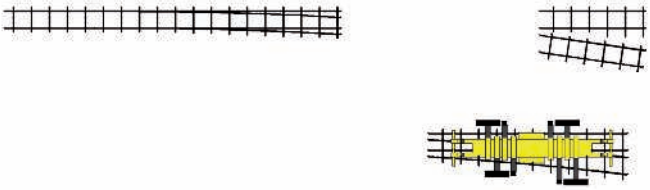

Pick up of second and all subsequent panels from assembly place

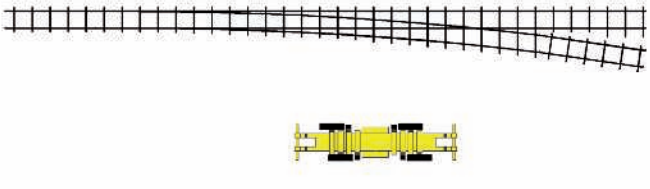

Installation of second and all subsequent panels, Tracklayer can leave to the side

CLEAR ADVANTAGES OF THE DESEC TRACKLAYER: EASY TRANSPORT, SHORT SET-UP TIMES.

THE TECHNICAL HIGHLIGHTS.

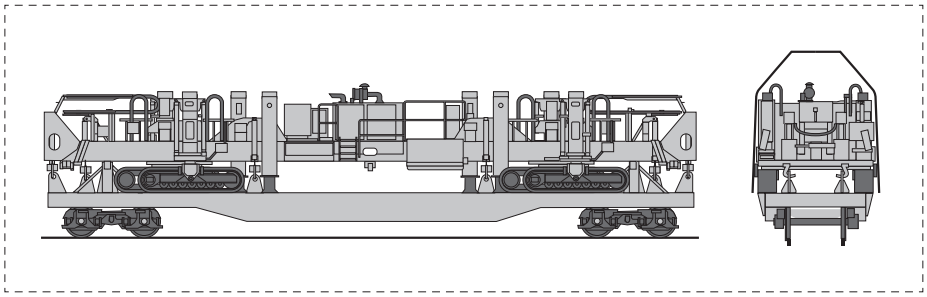

Railway transport on standard flat wagon

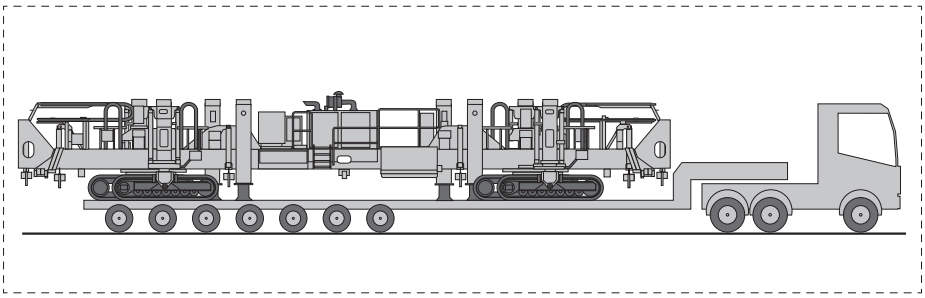

Road transport on standard trailer

The DESEC Tracklayer can hydraulically retract the main frame as well as the crawler arms and support arms making it small enough to be transported on a railway flat wagon or a road trailer. There are no parts to be dismantled and there is no need for external lifting equipment for loading or unloading.

Transport on a flat wagon or road trailer has one further major advantage: the DESEC Tracklayer is only a 'load' when transported on the railways and such doesn't need acceptance/homologation as a rail vehicle.

The DESEC Tracklayer can be unloaded under its own power immediately ready to work in 10 minutes, saving time and reducing operating costs. The reliability of one compact machine is far higher when compared to machines or systems that have to be assembled at each and every new location or task. Splitting into several units for transport is not necessary.

Unloading sequence

↑
Technical Development Center

WHY KIROW?
CRANE CONSTRUCTION SINCE 1880.

→ KNOW HOW

With more than 5,000 units delivered Kirow is world market leader for railway cranes.

Since the mid 90s Kirow has been producing industrial transporters for track construction, shipyards and steel mills and established itself as a heavy duty equipment specialist. Kirow's products are based on organically grown know-how built up gradually by working closely together with our customers. The DESEC Tracklayer is a modular product, constructed in standardised sizes derived from our proven product concept. This modular design can easily be adapted to specific customer needs and individual railways' requirements. This way our customers get the best of both worlds:

- firstly, benefiting from the proven reliability of standardised components and design principles
- secondly, individual customer requirements can be fulfilled and the DESEC Tracklayer design tailored to comply with country specific regulations.

The model variations displayed in the technical data overview give an indication of what we can deliver and should you wish, operating models can be viewed on request.

Turnout renewal equipment is also another market-leading range produced by Kirow:

- Multi Tasker
- Switch Tilter
- DESEC Tracklayer

Our entire product family ideally compliments each other and offers the perfect solution for each and every infrastructure requirement.

→ QUALITY

For us quality means, a sophisticated product concept, in-depth knowledge in design, construction and control, as well as the highest precision in fabrication and production. It goes without saying that our engineers test and check all mechanical, hydraulic and electrical groups of components meticulously. Decisive benefits:

- maximum capability and reliability
- low operating costs
- long service life (even under the toughest operating conditions)

→ SERVICE

Our aim is to provide 'Service Excellence' for us this means, among other things, to be present and available. Our customer service team is always ready to respond and support your operation helping prevent unnecessary downtimes; you can always contact us via the 24 hour hotline. Highly-qualified engineers and technical service personnel in our after-sales service department provide additional support to ensure your safety and complete customer satisfaction. Last but not least, we place great

↑
Tracklayer in the finishing hall in Leipzig

importance on detailed and appropriate training and support of your personnel.

→ PARTNER APPROACH

The DESEC Tracklayer is a product with an extremely long working life. The decision in favour of this crane is simultaneously the beginning of a comprehensive customer/supplier relationship often becoming manifest in repeat and follow-up orders. We attach great importance in ensuring that this relationship is fair and provides long-term benefits for both parties. For us this relationship starts long before the signing of a contract. We would be pleased to advise you on your options during project discussions, simply give us a call.

↑
Kirow production facilities in Leipzig

DESEC TRACKLAYER – STANDARD MODELS.

THE DESEC TRACKLAYER AT A GLANCE.

TL 1200

The TL 1200 is the standard machine for handling of turnouts in sections of up to 36 to 40 meters.

There are two basic sizes: broad gauge and UIC gauge. The broad gauge version takes advantage of the bigger permissible transport dimensions and is usually stronger.

Our design department can work with your project team to engineer the TL 1200 in varying dimensions and adjust the strength of the steel structure to lift heavier loads. We can also offer technical solutions that enable the TL 1200 to handle longer panels.

The TL 1200 is transported on a normal 4 axle flat wagon but it can be transported on a standard multiple axle trailer on the road if required.

The TL 1200 is a diesel hydraulic machine with radio remote control and backup systems for engine failure.

Basic features of the TL 1200:

- Transport weight: 52 - 55 tons
- Transport length: 18.5 meters
- Max. working length: 28.5 meters
- Lifting capacity: 36 to 40 tons
- Max. panel length: 36 to 40 meters
- Width between crawlers: 4.7 to 5.5 meters

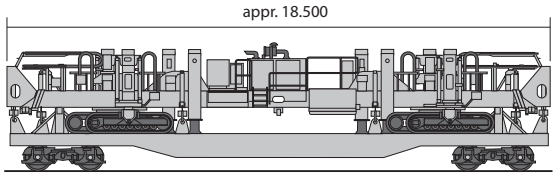

Transport position

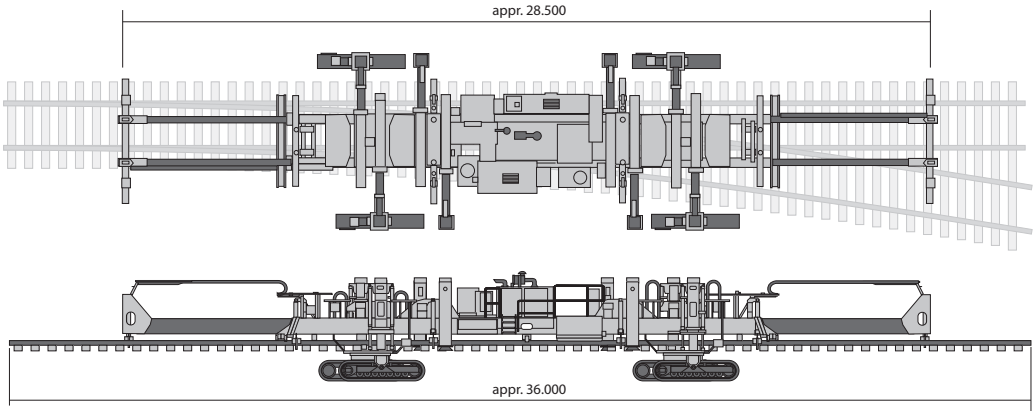

Working position

TL 2000

The TL 2000 is designed to lift heavy switch sections or even entire switches up to 55 tons.

It is more suitable for broad gauge and heavy haul railways that use heavy switches.

Our design department can work with your project team to engineer the TL 2000 so that it can work on a specific rail gauge, the steel structure can also be adapted to lift heavier loads and we offer technical solutions that enable the TL 2000 to handle longer panels.

The TL 2000 is transported on an 8 axle flat wagon or a double container wagon. It can also be transported on larger road trailers.

The crawlers are bigger and dimensioned in order to ensure permissible ground pressure is not exceeded.

The TL 2000 is a diesel hydraulic machine with 30 % more power compared to the TL1200. It is driven by radio remote control and has backup systems for engine failure.

Basic features of the TL 2000:

- Transport weight: approx. 70 tons
- Transport length: 25 meters
- Max. working length: 37 meters
- Lifting capacity: 55 tons
- Max. panel length: 45 meters (increased on request)
- Width between crawlers: 5.5 meters (increased on request)

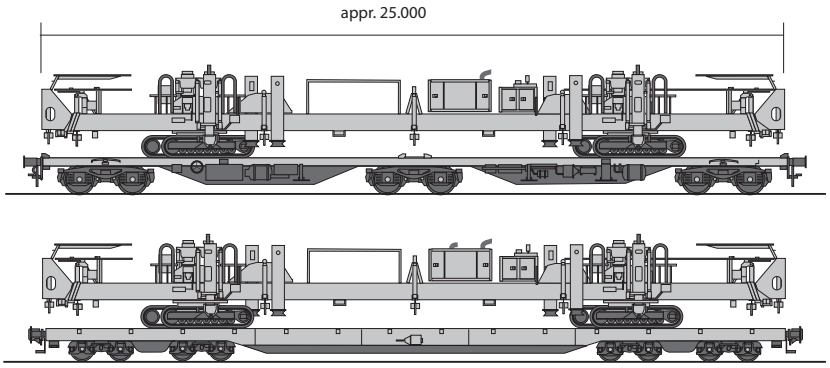

Transport position

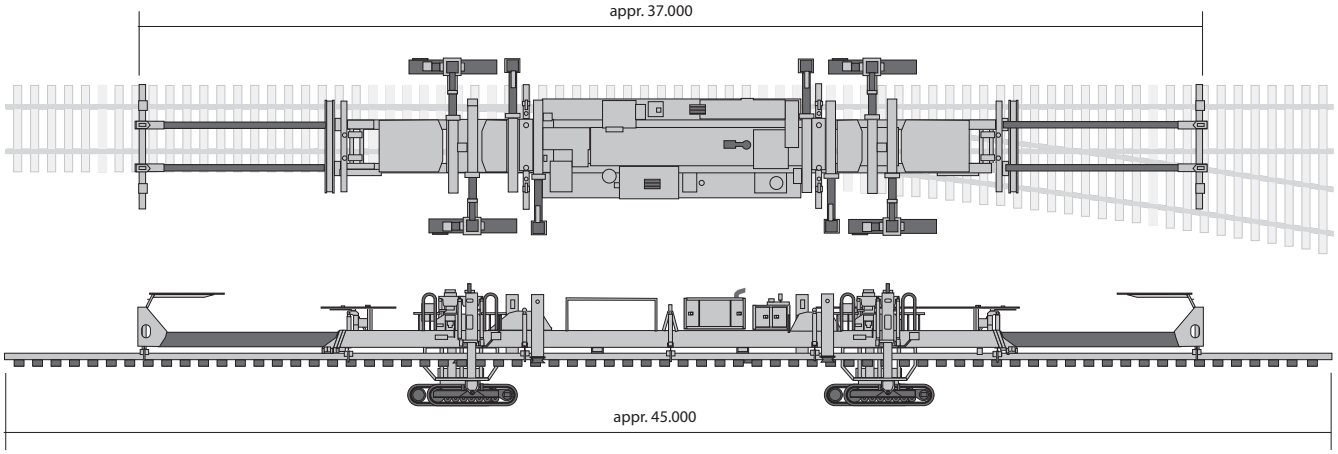

Working position

KIROW ARDELT GMBH
SPINNEREISTRASSE 13
04179 LEIPZIG/GERMANY

TELEFON +49 (0) 341.49.53 0
FAX +49 (0) 341.49.53 108
E-MAIL TRACKLAYER@KIROW.DE

WWW KIROW.DE